Yale® HOISTS SHAW-BOX®

COMMON ELECTRICAL COMPONENTS
& STANDARD ELECTRICAL WIRING
DIAGRAMS FOR:

YALE / SHAW-BOX WIRE ROPE HOISTS

COMPONENTES ELECTRICOS COMUNES Y
DIAGRAMAS ELECTRICOS ESTANDARES
PARA:

YALE / SHAW-BOX POLIPASTOS DE CABLE DE ACERO

Table of Contents

Common Parts Reference Guide/Guid de Referencia de Partes Comunes ***Page #***

1. Electrical Controls Application Reference 3
2. Referencia Electrica del uso de los Controles.....4

Wiring Diagrams/Diagrama Electrico

3. Y80/800 Series – 1 Speed Hoist 5
4. Y80/800 Series – Polipasto de 1 Velocidad.....6
5. Y80/800 Series – 2 Speed Hoist 7
6. Y80/800 Series – Polipasto de 2 Velocidades 8
7. 700 Series Size 2&3 – 1 Speed Hoist 9
8. 700 Series Size 2&3 – Polipasto de 1 Velocidad.....10
9. 700 Series Size 2&3 – 2 Speed Hoist 11
10. 700 Series Size 2&3 – Polipasto de 2 Velocidades 12
11. Y80/800 & 700 Series Size 2&3 - 1 Speed Motorized Trolley 13
12. Y80/800 & 700 Series Size 2&3 – Trole de 1 Velocidad.....14
13. Y80/800 & 700 Series Size 2&3 - 2 Speed Motorized Trolley 15
14. Y80/800 & 700 Series Size 2&3 – Trole de 2 Velocidades 16
15. World Series y Global FEM Design 2 Speed Hoist.....17
16. World Series & Global FEM Design – Polipasto de 2 Velocidades.....18
17. World Series & Global FEM Design 2 Speed Trolley 19
18. World Series y Global FEM Design – Trole de 2 Velocidades.....20
19. Cable King Hoist – 1 Speed 21
20. Cable King Polipasto de 1 Velocidad 22
21. Cable King Hoist – 2 Speed 23
22. Cable King Polipasto de 2 Velocidades.....24
23. Cable King – 1 Speed Trolley.....25
24. Cable King – Trole de 1 Velocidad 26
25. Cable King – 2 Speed Trolley.....27
26. Cable King – Trole de 2 Velocidades 28

ELECTRICAL CONTROLS APPLICATION REFERENCE

PUSHBUTTONS

PUSHBUTTON STATIONS	
BUTTONS 4488_____ 4392_____	DROP LENGTH SLIM-LINE XAC-A
1H	01
2H	02
1H-1T	03
1H-2T	04
2H-1T	05
2H-2T	06
M-1H	07
M-2H	08
M-1H-1B	09
M-1H-2B	10
M-2H-1B	11
M-2H-2B	12
M-1H-1T	13
M-1H-2T	14
M-2H-1T	15
M-2H-2T	16
M-1H-1T-1B	17
M-1H-1T-2B	18
M-1H-2T-1B	19
M-1H-2T-2B	20
M-2H-1T-1B	21
M-2H-1T-2B	22
M-2H-2T-1B	23
M-2H-2T-2B	24

800 SERIES-HOIST ONLY-P.B. STATION	
1H	330609
2H	330608

SEE 445399 FOR OTHER PB'S

TRANSFORMERS

TRANSFOMERS 50/60HZ – 115V SEC.						
VA	PRI VOLT	PART #	PRIMARY AMP	PRIMARY FUSE	SECONDARY AMP	SECONDARY FUSE
75	230	229467-71	1.4	(2) 116963-10	1	116963-08
	460		0.8	(2) -07		
	208	-72	1.4	(2) -10		
	277		1.25	(2) -09		
	575	-73	0.6	(2) -05		
	*380/415	-74	0.8	(2) -07		
100	230	229467-11	2	(2) 116963-12	1.4	116963-10
	460		1	(2) -08		
	208	-12	2	(2) -12		
	277		1	(2) -08		
	575	-13	0.8	(2) -07		
	*380/415	-14	1	(2) -08		
150	230	229467-21	3	(2) 116963-14	2	116963-12
	460		1.4	(2) -10		
	208	-22	3	(2) -14		
	277		2	(2) -12		
	575	-23	1	(2) -08		
	*380/415	-24	1.4	(2) -10		
300	230	229467-31	4	(2) 116963-16	4	116963-16
	460		3	(2) -14		
	208	-32	4	(2) -16		
	277		5	(2) -17		
	575	-33	2	(2) -12		
	*380/415	-34	3	(2) -14		
500	230	229467-41	5	(2) 116963-17	6	116963-18
	460					
	208	-42	6	(2) -18		
	277					
	575	-43	4	(2) -16		
	*380/415	-44	6	(2) -18		

* USE 116964-01 SINGLE POLE FUSE BASE FOR SECONDARY FUSE

CONTACTORS

PART #	HORSEPOWER AT 200V	230V	380V/50Hz	460V	575V	DESCRIPTION	TELE PART #	AMPS	COIL	SEALED	INRUSH
333109-11 -21 -31	2	3	5	5	5	3 N.O.-1 N.C. REVERSER 2 N.O., 2 N.C. FAST 3 N.O.-1 N.O. MAINLINE	LC2-K09-01F7 LC1-K09-008F7 LC1-K09-10F7	9	110V 50/60HZ	4.5VA	30VA
333110-10 -20 -30	3	3	7.5	7.5	10	3 N.O.-1 N.C.-1 N.O. REV. 2 N.O., 2 N.C. FAST 3 N.O.-1 N.C.-1 N.O. M/L	LC2-D12-F7 LC1-D12-008F7 LC1-D12-F7	12		7.5VA	70VA
333110-11 ——— -31	5	5	10	10	15	3 N.O.-1 N.C.-1 N.O. REV. 2 N.O., 2 N.C. FAST 3 N.O.-1 N.C.-1 N.O. M/L	LC2-D18-F7 ——— LC1-D18-F7	18			
333110-12 -22 -32	7.5	7.5	15	15	20	3 N.O.-1 N.C.-1 N.O. REV. 2 N.O., 2 N.C. FAST 3 N.O.-1 N.C.-1 N.O. M/L	LC2-D25-F7 LC1-D25-008F7 LC1-D25-F7	25		8.5VA	100VA
333110-13 ——— -33	10	10	20	20	30	3 N.O.-1 N.C.-1 N.O. REV. 2 N.O., 2 N.C. FAST 3 N.O.-1 N.C.-1 N.O. M/L	LC2-D32-F7 ——— LC1-D32-F7	32			
333110-14 -24 -34	10	10	25	30	30	3 N.O.-1 N.C.-1 N.O. REV. 2 N.O., 2 N.C. FAST 3 N.O.-1 N.C.-1 N.O. M/L	LC2-D40-F7 LC1-D40-008F7 LC1-D40-F7	40		26VA	220VA
333110-15 ——— -35	10	15	30	40	40	3 N.O.-1 N.C.-1 N.O. REV. 2 N.O., 2 N.C. FAST 3 N.O.-1 N.C.-1 N.O. M/L	LC2-D50-F7 ——— LC1-D50-F7	50			
333110-16 -26 -36	20	20	40	50	50	3 N.O.-1 N.C.-1 N.O. REV. 2 N.O., 2 N.C. FAST 3 N.O.-1 N.C.-1 N.O. M/L	LC2-D65-F7 LC1-D65-008F7 LC1-D65-F7	65			
333110-17 -27 -37	25	30	50	60	60	3 N.O.-1 N.C.-1 N.O. REV. 2 N.O., 2 N.C. FAST 3 N.O.-1 N.C.-1 N.O. M/L	LC2-D80-F7 LC1-D80-008F7 LC1-D80-F7	80			
333110-18 -38	30	40	74	75	100	3 N.O.-1 N.C.-1 N.O. REV. 3 N.O.-1 N.C.-1 N.O. M/L	LC2-D115-F7 LC1-D115-F7	115		6VA	450VA
333110-19 -39	40	50	100	100	125	3 N.O.-1 N.C.-1 N.O. REV. 3 N.O.-1 N.C.-1 N.O. M/L	LC2-D150-F7 LC1-D150-F7	150			

NOTE: IF MOTOR HORSEPOWER IS THE SAME AS THE CONTACTOR MAXIMUM RATING, THEN USE NEXT SIZE LARGER CONTACTOR. ALSO, IF 2-SPEED CONTROL IS REQUIRED AND A FAST CONTACTOR IS NOT AVAILABLE FOR THE REQUIRED HORSEPOWER THEN USE THE CONTACTORS FROM THE NEXT HIGHER SIZE GROUPING.

FUSES

HORSEPOWER AT 1800 RPM 200	230	460	575	CLASS J FUSES FUSE	AMP	FUSE BASE
		1/4	1/4	116952-01	1	30A-600V 116953-03
			1/3			
		1/3		116952-02	2	
		1/2	1/2			
		(2) 1/4	(2) 1/4			
		3/4	3/4			
1/4	1/4	(2) 1/2	(2) 1/2	116952-03	3	
	1/3					
1/3	1/2	1	1			
			1 1/2	116952-04	4	
1/2			2			
		1 1/2	2 1/4	116952-05	5	
		2	2 1/2			
(2) 1/4	(2) 1/4		3 & 4	116952-06	6	
3/4	3/4	2 1/4				
(2) 1/2	(2) 1/2	2 1/2				
1	1					
		3		116952-08	8	
	1 1/2			116952-10	10	
1 1/2	2	4	5			
2	2 1/4	5		116952-12	12	
	2 1/2					
2 1/4				116952-15	15	
2 1/2						
3 & 4	3 & 4		7.5			
		7.5	10	116952-20	20	
5	5	10	15	116952-25	25	
	7.5	15	20	116952-30	30	
7.5		20	25	116952-40	40	60A-600V 116953-13
10	10	25	30	116952-50	50	
	15	30	40	116952-60	60	
15				116952-70	70	100A-600V 116953-23
	20	40	50	116952-80	80	
20				116952-90	90	
	25	50		116952-88	100	
25	30			116952-89	125	200A-600V 116953-33
30	40			116952-91	150	
40	50			116952-92	200	

NOTE: FUSE SIZES CHOSEN BASED ON NEC 430-150 & 430-152. ALSO NEC 430-52(a) EXCEPTION No.2: b. ALSO NEC 610-42(a).

***OTHER THAN 1800 RPM: FUSE SIZE = MOTOR FULL LOAD AMPS x 1.75

HORSEPOWER (1φ) 115	230	CLASS J FUSES FUSE	AMP	FUSE BASE
	1/4	116952-05	5	30A-600V 116953-02
	1/2	116952-08	8	
1/4		116952-10	10	
	1	116952-12	12	
1/2		116952-15	15	
1		116952-25	25	

CORD GRIPS & SEALINGS

	PART No.	NPT SIZE	CABLE DIAMETER	LOCKNUTS
NYLON CORD GRIPS SEALING	232510-01	1/2	.20-.35"	232510-09
	-02		.24-.47"	
	-03		.28-.47"	
	-04		.39-.56"	
	-11	3/4	.35-.63"	232510-19
	-12		.51-.71"	
	-21	1	.51-.79"	232510-29
	-22		.71-.98"	
	-31	1 1/4	.51-.79"	N/A
	-32		.71-.98"	
	-41	1 1/2	.79-1.02"	N/A
	-42		.86-1.26"	
ALUMINUM CORD GRIPS	232511-02	1/2	.125-.187"	N06779
	-04		.250-.375"	
	-05		.375-.500"	
	-06		.500-.625"	
	-16	3/4	.500-.625"	N06780
	-17		.625-.750"	
	-24	1	.750-.875"	N06781
	-25		.875-1.000"	
	-33	1 1/4	1.000-1.125"	N06782
	-34		1.125-1.250"	
	-44	1 1/2	1.125-1.250"	N06783
	-45		1.250-1.375"	

SOW CABLE

	PART No.	# OF CONDUCTORS	NOMINAL O.D.
CABLE SOW 16 AWG - 600V 90°C	115616-02	#16-2	.390
	-03	#16-3	.410
	-04	#16-4	.440
	-05	#16-5	.540
	-06	#16-6	.550
	-07	#16-7	.550
	-08	#16-8	.575
	-09	#16-9	.630
	-10	#16-10	.700
	-12	#16-12	.722
	-16	#16-16	.794
	-20	#16-20	.874
	-24	#16-24	1.003
	-30	#16-30	1.053
	-36	#16-36	1.120
CABLE SOW 14 AWG - 600V 90°C	115614-03	#14-3	.550
	-04	#14-4	.595
	-05	#14-5	.695
	-06	#14-6	.750
	-07	#14-7	.760
	-08	#14-8	.820
	-10	#14-10	.925
	-12	#14-12	.930
	-16	#14-16	1.065
	-20	#14-20	1.210
	-24	#14-24	1.325
	-30	#14-30	1.400
	-36	#14-36	1.510

SOFT STARTERS

SOFT-STARTS 60HZ						
MAX. TOTAL H.P. 200-230	460	575	SPEED	PART # SOFT-START ONLY	WITH NEMA-1 ENCL.	MAX. AMPS
3/4	2	---	1	227727-01	116039-01 904596	3.3
			2	227727-11	116039-11 904598	
2	5	---	1 OR 2	227727-21	116039-21 913186	7.5
6	10	10	1 OR 2	440528-01	no enclosure 913188	25
USE (10) PUSH ON TERMINAL PART # 115186-02						

GEARED LIMIT SWITCH

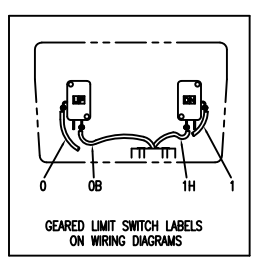

GEARED LIMIT SWITCH LABELS ON WIRING DIAGRAMS

DISCONNECT SWITCHES

CLASS J FUSED DISCONNECT SWITCHES		
30A	331902-01	DISCONNECT SWITCH
	331902-11	OPERATING HANDLE
	331902-21	OPERATING SHAFT (18.0 IN.)
60A	331902-02	DISCONNECT SWITCH
	331902-11	OPERATING HANDLE
	331902-21	OPERATING SHAFT (18.0 IN.)

TERMINAL BOARDS

TERMINAL BOARDS AMPS	TERM	PART #
20	6	117410-06
	9	117410-09
	10	117410-10
30	6	117845-06
75	6	103206-15

DISTRIBUTION BLOCKS

3 POLE DISTRIBUTION BLOCK		
PART #	117880-03	175A
PART #	117961-03	335A
PART #	117979-01	665A

GROUND BARS

5 CIRCUIT GROUND BAR KIT	
PART #	117856-01

Referencia Electrica del uso de los Controles

BOTONERAS

BOTONERAS

BOTONES 4488 ____ LONGITUD de caida Linea Delgada
4392_____ XAC–A

1H	01
2H	02
1H–1T	03
1H–2T	04
2H–1T	05
2H–2T	06
M–1H	07
M–2H	08
M–1H–1B	09
M–1H–2B	10
M–2H–1B	11
M–2H–2B	12
M–1H–1T	13
M–1H–2T	14
M–2H–1T	15
M–2H–2T	16
M–1H–1T–1B	17
M–1H–1T–2B	18
M–1H–2T–1B	19
M–1H–2T–2B	20
M–2H–1T–1B	21
M–2H–1T–2B	22
M–2H–2T–1B	23
M–2H–2T–2B	24

Botonera para polipasto Serie 800 unicamente	
1H	330609
2H	330608

Ver 445399 para otras Botoneras

TRANSFORMADORES

Transformadores 50/60HZ – 115V SEC.

VA	Voltaje Pri	Parte #	Primario AMP	Primario Fusible	Secundario AMP	Secundario Fusible
75	230	229467–71	1.4	(2) 116963–10	1	116963–08
	460		0.8	(2) –07		
	208	–72	1.4	(2) –10		
	277		1.25	(2) –09		
	575	–73	0.6	(2) –05		
	*380/415	–74	0.8	(2) –07		
100	230	229467–11	2	(2) 116963–12	1.4	116963–10
	460		1	(2) –08		
	208	–12	2	(2) –12		
	277		1	(2) –08		
	575	–13	0.8	(2) –07		
	*380/415	–14	1	(2) –08		
150	230	229467–21	3	(2) 116963–14	2	116963–12
	460		1.4	(2) –10		
	208	–22	3	(2) –14		
	277		2	(2) –12		
	575	–23	1	(2) –08		
	*380/415	–24	1.4	(2) –10		
300	230	229467–31	4	(2) 116963–16	4	116963–16
	460		3	(2) –14		
	208	–32	4	(2) –16		
	277		5	(2) –17		
	575	–33	2	(2) –12		
	*380/415	–34	3	(2) –14		
500	230	229467–41	5	(2) 116963–17	6	116963–18
	460					
	208	–42	6	(2) –18		
	277					
	575	–43	4	(2) –16		
	*380/415	–44	6	(2) –18		

*Usar 11694–01 Fusible base de 1 Polo para el fusible Secundario

Contactores

Parte #	Cabazos de Fuerza (HP) A 200V	230V	380V/50Hz	460V	575V	Descripcion	Tele Parte #	AMPS	Bobina	Sellado	En Acometidas
333109–11	2	3	5	5	5	3 N.O.–1 N.C. REVERSER	LC2–K09–01F7	9	110V 50/60HZ	4.5VA	30VA
–21						2 N.O., 2 N.C. FAST	LC1–K09–008F7				
–31						3 N.O.–1 N.O. MAINLINE	LC1–K09–10F7				
333110–10	3	3	7.5	7.5	10	3 N.O.–1 N.C.–1 N.O. REV.	LC2–D12–F7	12		7.5VA	70VA
–20						2 N.O., 2 N.C. FAST	LC1–D12–008F7				
–30						3 N.O.–1 N.C.–1 N.O. M/L	LC1–D12–F7				
333110–11	5	5	10	10	15	3 N.O.–1 N.C.–1 N.O. REV.	LC2–D18–F7	18			
———						2 N.O., 2 N.C. FAST	———				
–31						3 N.O.–1 N.C.–1 N.O. M/L	LC1–D18–F7				
333110–12	7.5	7.5	15	15	20	3 N.O.–1 N.C.–1 N.O. REV.	LC2–D25–F7	25		8.5VA	100VA
–22						2 N.O., 2 N.C. FAST	LC1–D25–008F7				
–32						3 N.O.–1 N.C.–1 N.O. M/L	LC1–D25–F7				
333110–13	10	10	20	20	30	3 N.O.–1 N.C.–1 N.O. REV.	LC2–D32–F7	32			
———						2 N.O., 2 N.C. FAST	———				
–33						3 N.O.–1 N.C.–1 N.O. M/L	LC1–D32–F7				
333110–14	10	10	25	30	30	3 N.O.–1 N.C.–1 N.O. REV.	LC2–D40–F7	40		26VA	220VA
–24						2 N.O., 2 N.C. FAST	LC1–D40–008F7				
–34						3 N.O.–1 N.C.–1 N.O. M/L	LC1–D40–F7				
333110–15	10	15	30	40	40	3 N.O.–1 N.C.–1 N.O. REV.	LC2–D50–F7	50			
———						2 N.O., 2 N.C. FAST	———				
–35						3 N.O.–1 N.C.–1 N.O. M/L	LC1–D50–F7				
333110–16	20	20	40	50	50	3 N.O.–1 N.C.–1 N.O. REV.	LC2–D65–F7	65			
–26						2 N.O., 2 N.C. FAST	LC1–D65–008F7				
–36						3 N.O.–1 N.C.–1 N.O. M/L	LC1–D65–F7				
333110–17	25	30	50	60	60	3 N.O.–1 N.C.–1 N.O. REV.	LC2–D80–F7	80			
–27						2 N.O., 2 N.C. FAST	LC1–D80–008F7				
–37						3 N.O.–1 N.C.–1 N.O. M/L	LC1–D80–F7				
333110–18	30	40	74	75	100	3 N.O.–1 N.C.–1 N.O. REV.	LC2–D115–F7	115		6VA	450VA
–38						3 N.O.–1 N.C.–1 N.O. M/L	LC1–D115–F7				
333110–19	40	50	100	100	125	3 N.O.–1 N.C.–1 N.O. REV.	LC2–D150–F7	150			
–39						3 N.O.–1 N.C.–1 N.O. M/L	LC1–D150–F7				

Nota: Si los Caballos de Fuerza del motor son iguales al grado maximo del contactor, entonces utilice un contactor del siguiente grupo de mayor tamano. Tambien si se requiere el control de 2 velocidades, y un contactor rapido no esta disponible para los caballos de fuerza requeridos, utilice los contactores del siguiente grupo de mayor tamano

Fusibles

Caballos de Fuerza (HP) a 1800 RPM 200	230	460	575	Fusibles Clase J Fusible	AMP	Base para Fusibles
		1/4	1/4	116952–01	1	30A–600V 116953–03
			1/3			
		1/3		116952–02	2	
		1/2	1/2			
		(2) 1/4	(2) 1/4			
		3/4	3/4			
1/4	1/4	(2) 1/2	(2) 1/2	116952–03	3	
	1/3					
1/3	1/2	1	1			
			1 1/2	116952–04	4	
1/2			2			
		1 1/2	2 1/4	116952–05	5	
		2	2 1/2			
(2) 1/4	(2) 1/4		3 & 4	116952–06	6	
3/4	3/4	2 1/4				
(2) 1/2	(2) 1/2	2 1/2				
1	1					
		3		116952–08	8	
	1 1/2			116952–10	10	
1 1/2	2	4	5			
2	2 1/4	5		116952–12	12	
	2 1/2					
2 1/4				116952–15	15	
2 1/2						
3 & 4	3 & 4		7.5			
		7.5	10	116952–20	20	
5	5	10	15	116952–25	25	
	7.5	15	20	116952–30	30	
7.5		20	25	116952–40	40	60A–600V 116953–13
10	10	25	30	116952–50	50	
	15	30	40	116952–60	60	
15				116952–70	70	100A–600V 116953–23
	20	40	50	116952–80	80	
20				116952–90	90	
	25	50		116952–88	100	
25	30			116952–89	125	200A–600V 116953–33
30	40			116952–91	150	
40	50			116952–92	200	

Nota: Elguir el Tamano de los Fusibles basandose en NEC 430–180 & 430–152. tambien NEC 430–52(a) Exepcion No. 2: b Tambien NEC 610–42(a)

Otro diferente a 1800 RPM Tamano de Fusible = Carga Completa de Amps del Motor x 1.75

Caballos de Fuerza (HP) (1φ) 115	230	Fusibles Clase J Fusible	AMP	Base para fusibles
	1/4	116952–05	5	30A–600V 116953–02
	1/2	116952–08	8	
1/4		116952–10	10	
	1	116952–12	12	
1/2		116952–15	15	
1		116952–25	25	

Abrazaderas para Cordon Conductor de Botoneras

	Parte No.	Tamano NPT	Diametro de Cable	Tuerca de Sequridad
Abrazaderas de Nylon Selladas para Cordon Conductor	232510–01	1/2	.20–.35"	232510–09
	–02		.24–.47"	
	–03		.28–.47"	
	–04		.39–.56"	
	–11	3/4	.35–.63"	232510–19
	–12		.51–.71"	
	–21	1	.51–.79"	232510–29
	–22		.71–.98"	
	–31	1 1/4	.51–.79"	N/A
	–32		.71–.98"	
	–41	1 1/2	.79–1.02"	N/A
	–42		.86–1.26"	
Adrazaderas de Aluminio para Cordon Conductor	232511–02	1/2	.125–.187"	N06779
	–04		.250–.375"	
	–05		.375–.500"	
	–06		.500–.625"	
	–16	3/4	.500–.625"	N06780
	–17		.625–.750"	
	–24	1	.750–.875"	N06781
	–25		.875–1.000"	
	–33	1 1/4	1.000–1.125"	N06782
	–34		1.125–1.250"	
	–44	1 1/2	1.125–1.250"	N06783
	–45		1.250–1.375"	

Cable

	Parte No.	# de Conductores	Dimension Externa Nominal
Cable SOW 16 AWG – 600V 90°C	115616–02	#16–2	.390
	–03	#16–3	.410
	–04	#16–4	.440
	–05	#16–5	.540
	–06	#16–6	.550
	–07	#16–7	.550
	–08	#16–8	.575
	–09	#16–9	.630
	–10	#16–10	.700
	–12	#16–12	.722
	–16	#16–16	.794
	–20	#16–20	.874
	–24	#16–24	1.003
	–30	#16–30	1.053
	–36	#16–36	1.120
Cable SOW 14 AWG – 600V 90°C	115614–03	#14–3	.550
	–04	#14–4	.595
	–05	#14–5	.695
	–06	#14–6	.750
	–07	#14–7	.760
	–08	#14–8	.820
	–10	#14–10	.925
	–12	#14–12	.930
	–16	#14–16	1.065
	–20	#14–20	1.210
	–24	#14–24	1.325
	–30	#14–30	1.400
	–36	#14–36	1.510

Arrancadores Suaves

Arranques Suaves 60HZ

Total Max HP 200–230	460	575	Velocidad	Parte # Arranques Suaves Unicamente	Con encerramiento NEMA 1	Amps Max.
3/4	2	---	1	227727–01	116039–01 904596	3.3
			2	227727–11	116039–11 904598	
2	5	---	1 OR 2	227727–21	116039–21 913186	7.5
6	10	10	1 OR 2	440528–01	no encerramiento 913188	25
Usar (10) Empuje en la terminal No. 115186–02						

Interruptor de Separacion

Interruptor de Separacion con fusibles Clase J

30A	331902–01	Interruptor de Separacion
	331902–11	Manivela de Operacion
	331902–21	Flecha de Operacion (18.0 in)
60A	331902–02	Interruptor de Separacion
	331902–11	Manivela de Operacion
	331902–21	Flecha de Operacion (18.0 in)

Limite de Carrera Engranado

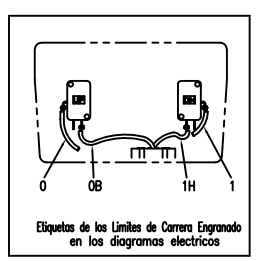

Etiquetas de los Limites de Carrera Engranado en los diagramas electricos

Tableros Terminales

Tableros de Terminales

AMPS	Term	Parte #
20	6	117410–06
	9	117410–09
	10	117410–10
30	6	117845–06
75	6	103206–15

Bloque de Distribucion

Bloque de Distribucion de 3 Polos		
Parte #	117880–03	175A
Parte #	117961–03	335A
Parte #	117979–01	665A

Barras de tierra

Kit de Barras de tierra de 5 circuitos	
Parte #	117856–01

WIRE #	DEVICE CONNECTED
HL1	U–D, HCPT
HL2	U–D, HCPT
HL3	U–D
HT1	U–D
HT2	U–D
HT3	U–D
0	
0A	D, U
0W	
0H	D
1	U
1A	U, D
H91	HCFU
92	HCPT, G, U, D
B1	U–D
B2	U, D

Go To Index

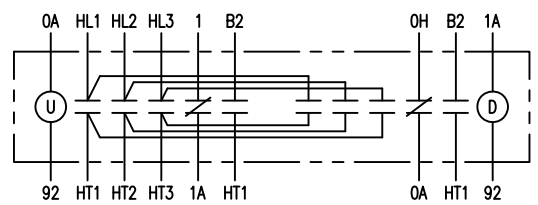

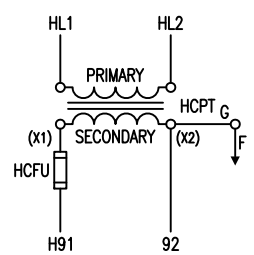

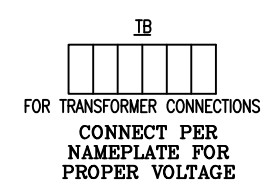

ELEMENTARY DIAGRAM

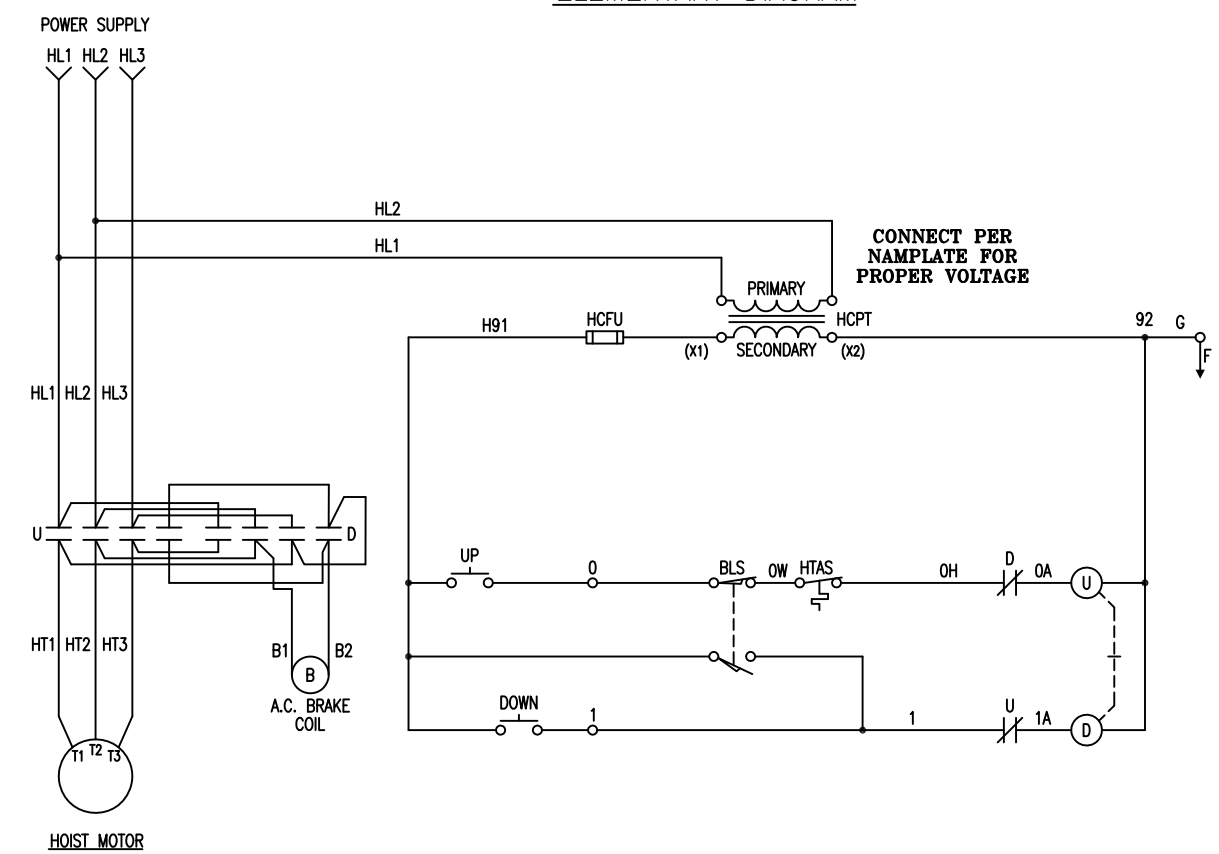

Y80/800 SERIES
1–SPEED HOIST

⚠WARNING:

UNLESS HOOK RAISES WHEN "UP" PUSHBUTTON IS PRESSED, SEVERE HOIST DAMAGE AND A DROPPED LOAD MAY RESULT.

CORRECT IMPROPER HOOK DIRECTION BY INTER–CHANGING MOTOR INPUT POWER LEADS L1 AND L2. DO NOT CHANGE PUSHBUTTON WIRING.

⚠WARNING:

THIS EQUIPMENT MUST BE EFFECTIVELY GROUNDED ACCORDING TO APPLICABLE CODES.

⚠AVERTISSEMENT:

CET EQUIPMENT DOIT ETRE MIS A'LA TERRE EN ACCORDANCE AVEC LES NORMES EN VIGUEUR.

SYMBOL DESIGNATIONS

HCPT – CONTROL CIRCUIT TRANSFORMER
HCFU – CONTROL CIRCUIT FUSING
U – HOIST UP CONTACTOR
D – HOIST DOWN CONTACTOR
BLS – HOIST BLOCK OPERATED LIMIT SWITCH
HTAS – HOIST MOTOR TEMPERATURE ACTIVATED SWITCH
TB – TERMINAL BOARD
G – FRAME GROUND

NO.	CHANGE	DATE	ITL.

WIRING DIAGRAM A.C.
1–SPEED HOIST
WITH TAS AND BLS

SC. ------
DA. 01/04/07
DR. SJDA
CK.
AP.

YALE · LIFT-TECH
Division of Columbus McKinnon Corporation
Muskegon, Michigan 49443

SHEET 47 OF 99 SHEETS

451222

FIRST USED ON:

FROM: 451032

Cable #	Dispositivo Conectado
HL1	U–D, HCPT
HL2	U–D, HCPT
HL3	U–D
HT1	U–D
HT2	U–D
HT3	U–D
0	
0A	D, U
0W	
0H	D
1	U
1A	U, D
H91	HCFU
92	HCPT, G, U, D
B1	U–D
B2	U, D

Go To Index

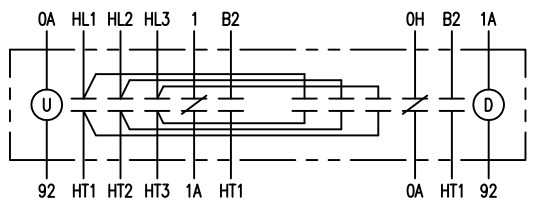

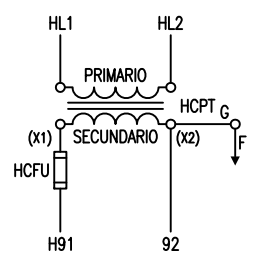

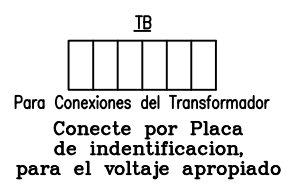

DIAGRAMA ELEMENTAL

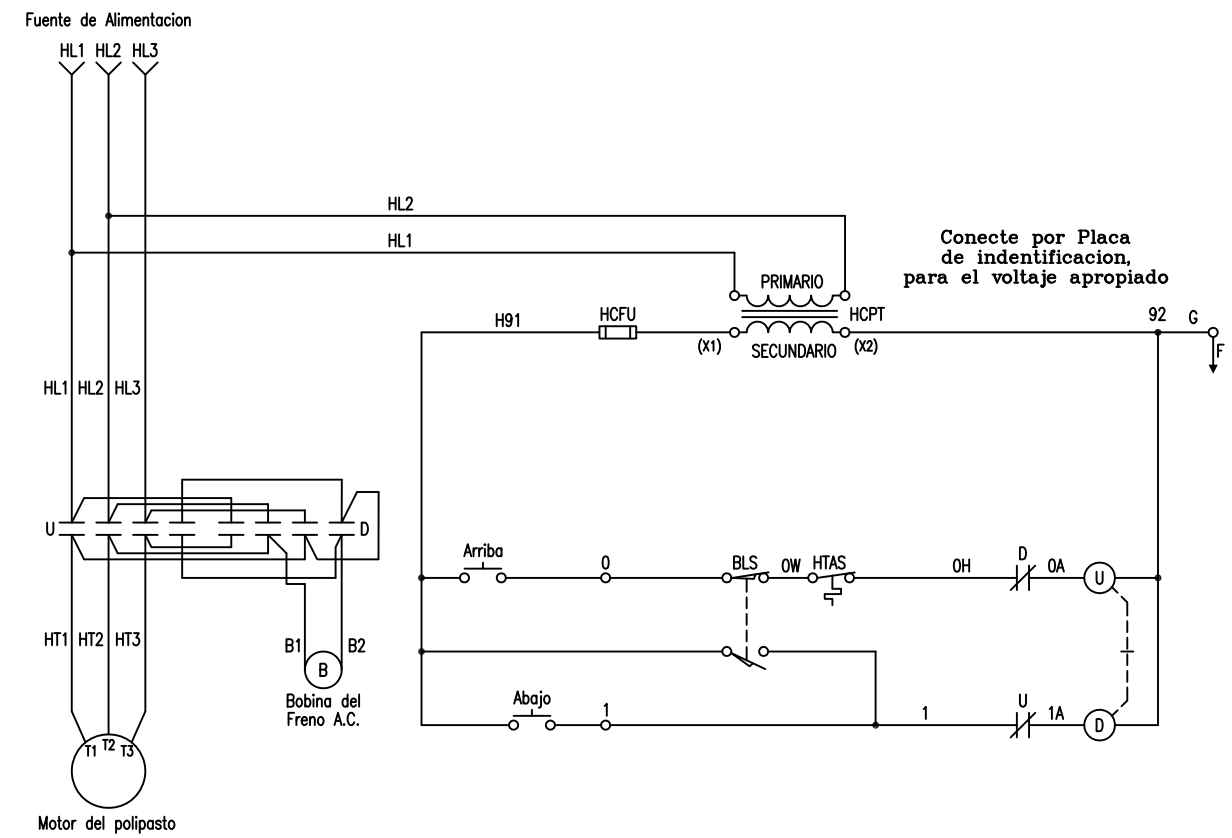

Y80/800 SERIES
Polipasto de 1 Velocidad

⚠Advertencia

A menos que el gancho de carga se eleve cuando el boton "UP" es presionado, danos severos al polipasto, y la caida de la carga pudieran resultar.

Corrija la inapropiada direccion del gancho, intercambiando la direccion de entrada de energia del motor que conduce L1 y L2. No cambie el cableado de la botonera

⚠Advertencia

Este equipo debe ponerse a tierra de manera eficaz de acuerdo con los codigos aplicables

⚠AVERTISSEMENT:

CET EQUIPMENT DOIT ETRE MIS A'LA TERRE EN ACCORDANCE AVEC LES NORMES EN VIGUEUR.

Designaciones de Simbolos

- HCPT – Transformador del Circuito de Control
- HCFU – Fusible del Circuito de Control
- U – Contactor de subir del polipasto
- D – Contactor de bajar del polipasto
- BLS – Interruptor de Limite de carrera, tipo Bloque
- HTAS – Interruptor activado por temperatura del motor del polipasto
- TB – Tablero de Terminales
- G – Marco de tierra

NO.	CHANGE	DATE	ITL.
1	Spanish Translation	1/14/08	MRF

Diagrama Electrico — A.C.
Polipasto de 1 Velocidad
con TAS y BLS

SC. ------
DA. 01/04/07
DR. SJDA
CK.
AP.

YALE · LIFT-TECH
Division of Columbus McKinnon Corporation
Muskegon, Michigan 49443

SHEET 47 OF 99 SHEETS

451222SP

FIRST USED ON:

FROM: 451032

WIRE #	DEVICE CONNECTED
HL1	U–D, HCPT
HL2	U–D, HCPT
HL3	U–D
A	U–D, F
C	U–D, F
HT1	F
HT2	U–D
HT3	F
HT11	F
HT13	F
0	
0A	D, U
0W	
0H	D
1	U
1A	U, D
2	F
H91	HCFU
92	HCPT, G, U, D, F
B1	U–D
B2	U, D

Go To Index

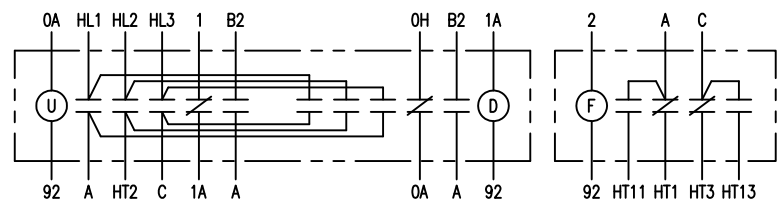

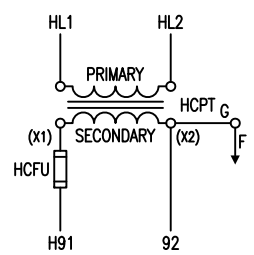

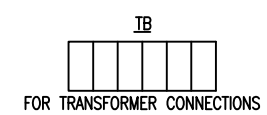

ELEMENTARY DIAGRAM

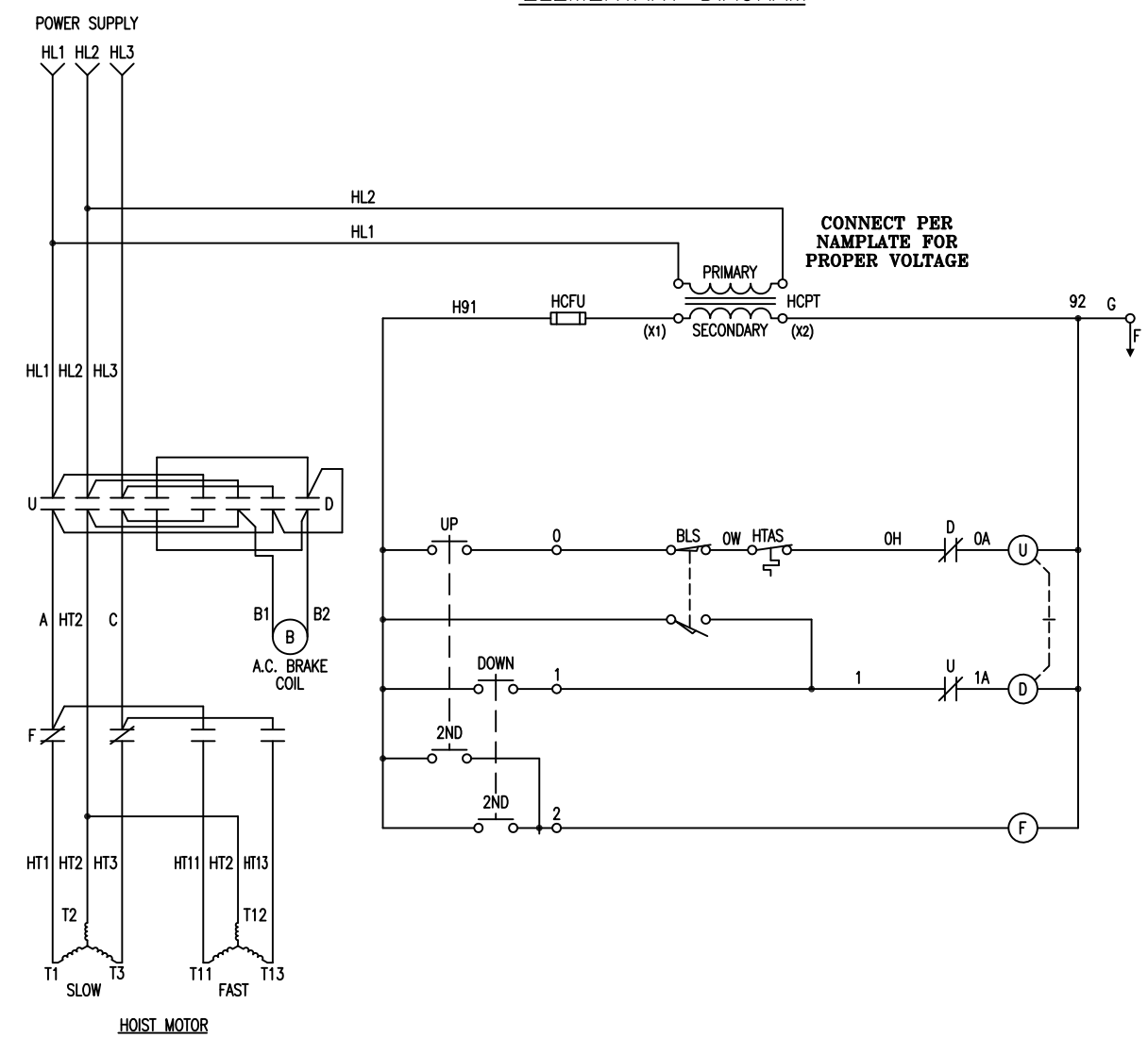

Y80/800 SERIES
2–SPEED HOIST

⚠WARNING:

UNLESS HOOK RAISES WHEN "UP" PUSHBUTTON IS PRESSED, SEVERE HOIST DAMAGE AND A DROPPED LOAD MAY RESULT.

CORRECT IMPROPER HOOK DIRECTION BY INTER–CHANGING MOTOR INPUT POWER LEADS L1 AND L2. DO NOT CHANGE PUSHBUTTON WIRING.

⚠WARNING:

THIS EQUIPMENT MUST BE EFFECTIVELY GROUNDED ACCORDING TO APPLICABLE CODES.

⚠AVERTISSEMENT:

CET EQUIPMENT DOIT ETRE MIS A'LA TERRE EN ACCORDANCE AVEC LES NORMES EN VIGUEUR.

SYMBOL DESIGNATIONS

HCPT – CONTROL CIRCUIT TRANSFORMER
HCFU – CONTROL CIRCUIT FUSING
U – HOIST UP CONTACTOR
D – HOIST DOWN CONTACTOR
F – HOIST FAST SPEED CONTACTOR
BLS – HOIST BLOCK OPERATED LIMIT SWITCH
HTAS – HOIST MOTOR TEMPERATURE ACTIVATED SWITCH
TB – TERMINAL BOARD
G – FRAME GROUND

NO.	CHANGE	DATE	ITL.	WIRING DIAGRAM A.C.
				2–SPEED HOIST
				WITH TAS AND BLS
				SC. ------
				DA. 01/04/07
				DR. SJDA
				CK.
				AP.

YALE • LIFT-TECH
division of Columbus McKinnon Corporation
Muskegon, Michigan 49443

SHEET 48 OF 99 SHEETS

451222

FIRST USED ON:

FROM: 451033

Go To Index

Cable #	Dispositivo Conectado
HL1	U–D, HCPT
HL2	U–D, HCPT
HL3	U–D
A	U–D, F
C	U–D, F
HT1	F
HT2	U–D
HT3	F
HT11	F
HT13	F
0	
0A	D, U
0W	
0H	D
1	U
1A	U, D
2	F
H91	HCFU
92	HCPT, G, U, D, F
B1	U–D
B2	U, D

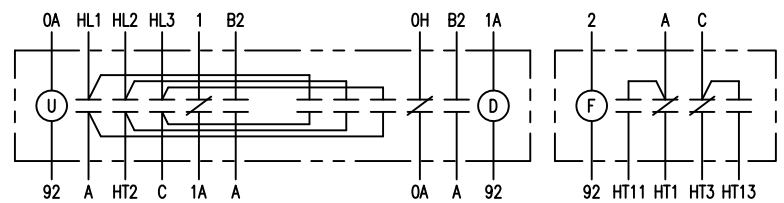

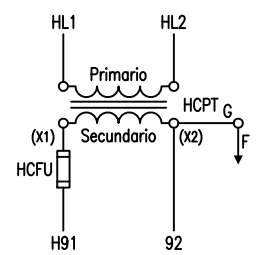

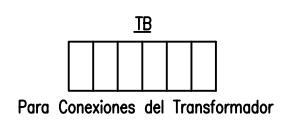

DIAGRAMA ELEMENTAL

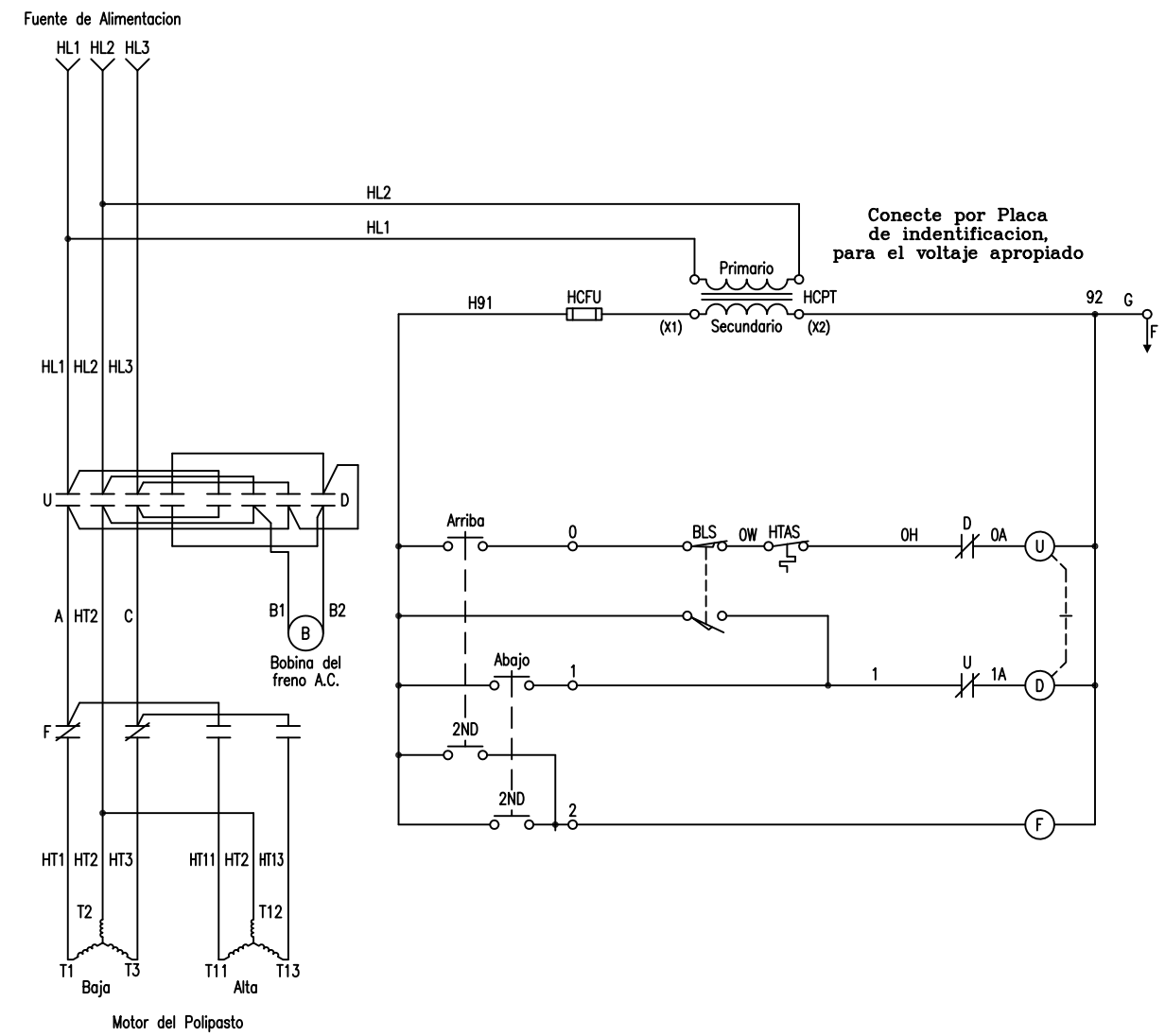

Y80/800 SERIES
Polipasto de 2 Velocidades

⚠Advertencia

A menos que el gancho de carga se eleve cuando el boton "UP" es presionado, danos severos al polipasto, y la caida de la carga pudieran resultar.

Corrija la inapropiada direccion del gancho, intercambiando la direccion de entrada de energia del motor que conduce L1 y L2. No cambie el cableado de la botonera

⚠Advertencia

Este equipo debe ponerse a tierra de manera eficaz de acuerdo con los codigos aplicables

⚠AVERTISSEMENT:

CET EQUIPMENT DOIT ETRE MIS A'LA TERRE EN ACCORDANCE AVEC LES NORMES EN VIGUEUR.

Designaciones de Simbolos

HCPT – Transformador del Circuito de Control
HCFU – Fusible del Circuito de Control
U – Contactor de subir del polipasto
D – Contactor de bajar del polipasto
BLS – Interruptor de Limite de carrera, tipo Bloque
HTAS – Interruptor activado por temperatura del motor del polipasto
TB – Tablero de Terminales
G – Marco de tierra
F

NO.	CHANGE	DATE	ITL.
1	Spanish Translation	1/23/08	MRF

Diagrama Electrico A.C.
Polipasto de 2 Velocidad
con TAS y BLS

SC. ------
DA. 01/04/07
DR. SJDA
CK.
AP.

YALE • LIFT-TECH
division of Columbus McKinnon Corporation
Muskegon, Michigan 49443

SHEET 48 OF 99 SHEETS

451222SP

FIRST USED ON:

FROM: 451033

WIRE #		DEVICE CONNECTED
HL1		U–D, PFU
HL2		U–D, PFU
HL3		U–D
PL1		PFU, HCPT
PL2		PFU, HCPT
T1		U–D
T2		U–D
T3		U–D
0	TB	
0A		D, U
0B	TB	
0C	TB	
0H	TB	D, BCM
1	TB	
1A		U, D
1H	TB	U, BCM
H91	TB	HCFU, BCM
92	TB	HCPT, G, U, D, BCM
B1		BCM
B2		BCM

Go To Index

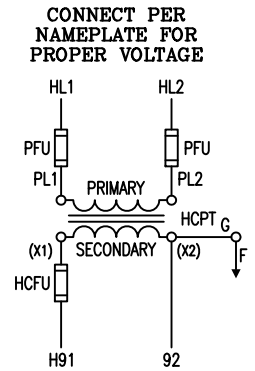

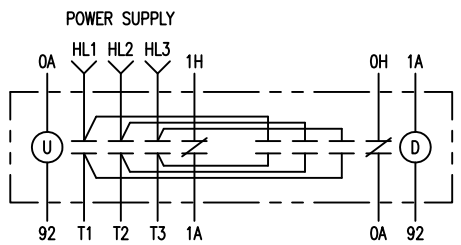

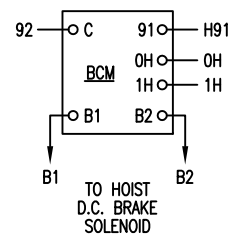

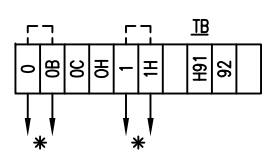

* NOTE:
TO THE UPPER AND LOWER GEAR LIMIT SWITCH. IF THE GLS IS NOT USED, JUMPER 0 TO 0B & 1 TO 1H, AS SHOWN.

ELEMENTARY DIAGRAM

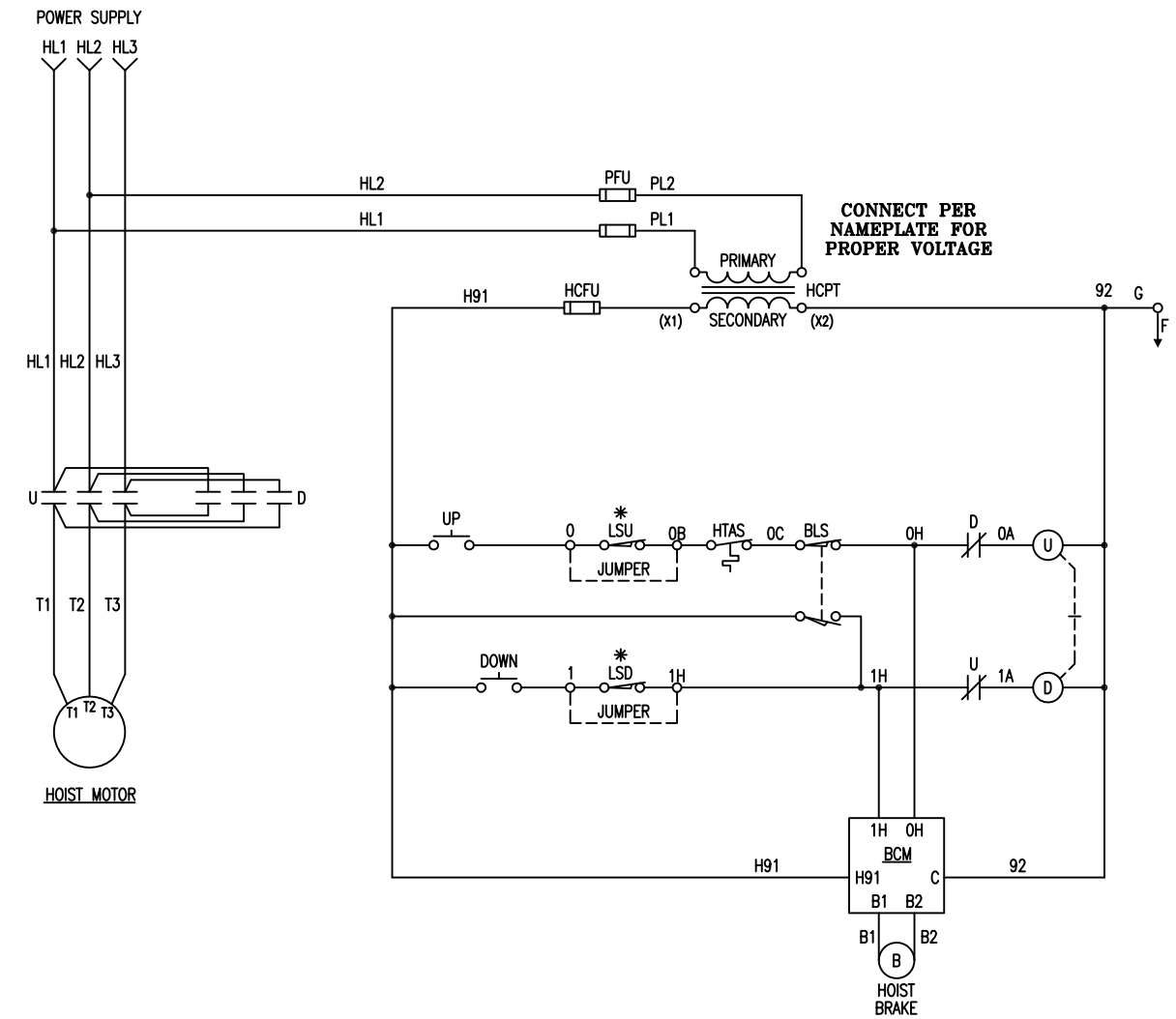

700 SERIES SIZE 2 & 3
1–SPEED HOIST

WARNING:
UNLESS HOOK RAISES WHEN "UP" PUSHBUTTON IS PRESSED, SEVERE HOIST DAMAGE AND A DROPPED LOAD MAY RESULT.
CORRECT IMPROPER HOOK DIRECTION BY INTER–CHANGING MOTOR INPUT POWER LEADS L1 AND L2. DO NOT CHANGE PUSHBUTTON WIRING.

WARNING:
THIS EQUIPMENT MUST BE EFFECTIVELY GROUNDED ACCORDING TO APPLICABLE CODES.

AVERTISSEMENT:
CET EQUIPMENT DOIT ETRE MIS A'LA TERRE EN ACCORDANCE AVEC LES NORMES EN VIGUEUR.

SYMBOL DESIGNATIONS
PFU – TRANSFORMER PRIMARY FUSING
HCPT – CONTROL CIRCUIT TRANSFORMER
HCFU – CONTROL CIRCUIT FUSING
U – HOIST UP CONTACTOR
D – HOIST DOWN CONTACTOR
LSU – HOIST UPPER GEAR TYPE LIMIT SWITCH
LSD – HOIST LOWER GEAR TYPE LIMIT SWITCH
BLS – HOIST BLOCK OPERATED LIMIT SWITCH
BCM – D.C. BRAKE CONTROL MODULE
HTAS – HOIST MOTOR TEMPERATURE ACTIVATED SWITCH
TB – TERMINAL BOARD
G – FRAME GROUND
F

NO.	CHANGE	DATE	ITL.	WIRING DIAGRAM A.C.
				700 SERIES HOIST, 1–SPEED
				WITH TAS, BLS, AND OPTIONAL GLS
				SC. ------
				DA. 10/11/96
				DR. RITTER
				CK.
				AP.

YALE · LIFT-TECH
Division of Columbus McKinnon Corporation
Muskegon, Michigan 49443

SHEET 49 OF 99 SHEETS

451222

FIRST USED ON:

FROM: 444920

Cable #		Dispositivo Conectado
HL1		U–D, PFU
HL2		U–D, PFU
HL3		U–D
PL1		PFU, HCPT
PL2		PFU, HCPT
T1		U–D
T2		U–D
T3		U–D
0	TB	
0A		D, U
0B	TB	
0C	TB	
0H	TB	D, BCM
1	TB	
1A		U, D
1H	TB	U, BCM
H91	TB	HCFU, BCM
92	TB	HCPT, G, U, D, BCM
B1		BCM
B2		BCM

Go To Index

Conecte por Placa
de indentificacion,
para el voltaje apropiado

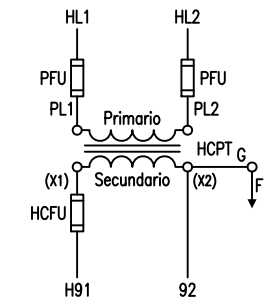

Fuente de Alimentacion

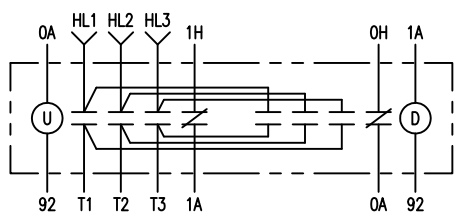

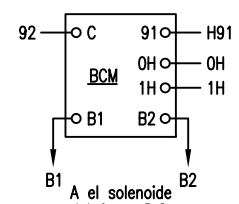

A el solenoide
del freno D.C.
del polipasto

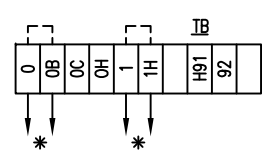

✱ NOTA:
A el Interruptor Limitador de carrera engrando.
Si el Limitador de carrera no esta en uso,
puentear el 0 al 0B y el 1 al 1H como se muestra.

DIAGRAMA ELEMENTAL

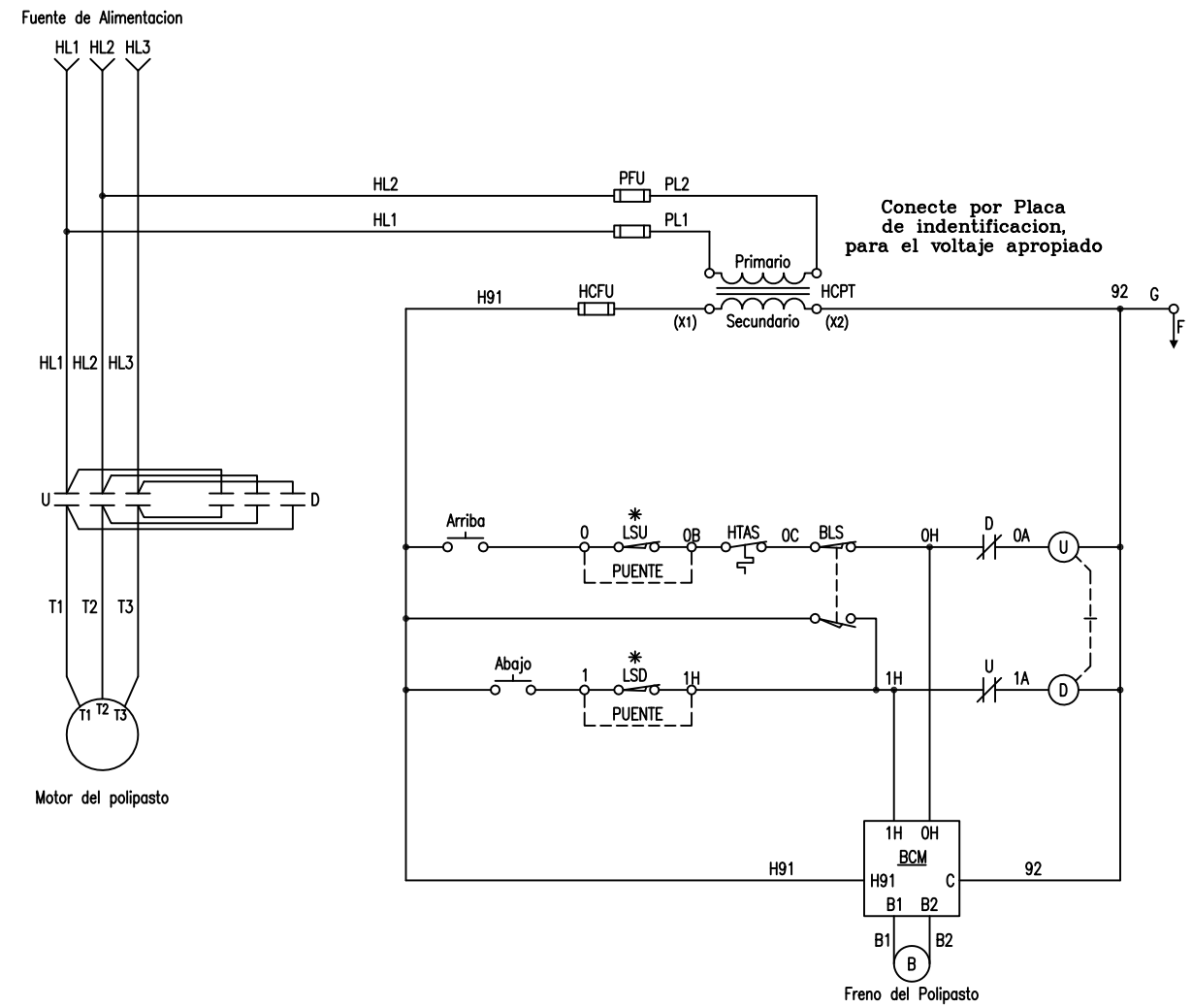

Conecte por Placa
de indentificacion,
para el voltaje apropiado

Serie 700 – SIZE 2 & 3
Polipasto de 1 Velocidad

⚠Advertencia

A menos que el gancho de carga se eleve cuando el boton "UP" es presionado, danos severos al polipasto, y la caida de la carga pudieran resultar.

Corrija la inapropiada direccion del gancho, intercambiando la direccion de entrada de energia del motor que conduce L1 y L2. No cambie el cableado de la botonera

⚠Advertencia

Este equipo debe ponerse a tierra de manera eficaz de acuerdo con los codigos aplicables

⚠AVERTISSEMENT:

CET EQUIPMENT DOIT ETRE MIS A'LA TERRE EN ACCORDANCE AVEC LES NORMES EN VIGUEUR.

Designaciones de Simbolos

PFU – Fusible Primario del Transformador
HCPT – Transformador del Circuito de Control
HCFU – Fusible del Circuito de Control
U – Contactor de subir del polipasto
D – Contactor de bajar del polipasto
LSU – Interruptor Limitador de carrera tipo engranado superior del polipasto
LSD – Interruptor Limitador de carrera tipo engranado inferior del polipasto
BLS – Interruptor de Limite de carrera, tipo Bloque
BCM – D.C. Modulo de Control del Freno
HTAS – Interruptor activado por temperatura del motor del polipasto
TB – Tablero de Terminales
G – Marco de tierra
F

NO.	CHANGE	DATE	ITL.	Diagrama Electrico	A.C.
1	Spanish Translation	1/23/08	MRF	Polipasto de dos velocidades Serie 700	
				con TAS, BLS y GLS opcional	

SC. ------
DA. 10/11/96
DR. RITTER
CK.
AP.

YALE · LIFT-TECH
Division of Columbus McKinnon Corporation
Muskegon, Michigan 49443

SHEET 49 OF 99 SHEETS

451222SP

FIRST USED ON:

FROM: 444920

WIRE #		DEVICE CONNECTED
HL1		U–D, PFU
HL2		U–D, PFU
HL3		U–D
PL1		PFU, HCPT
PL2		PFU, HCPT
A		U–D, F
C		U–D, F
T1		F
T2		U–D
T3		F
T11		F
T12		U–D
T13		F
0	TB	
0A		D, U
0B	TB	
0C	TB	
0H	TB	D, BCM
1	TB	
1A		U, D
1H	TB	U, BCM
2	TB	F
H91	TB	HCFU, BCM
92	TB	HCPT, G, U, D, F, BCM
B1		BCM
B2		BCM

Go To Index

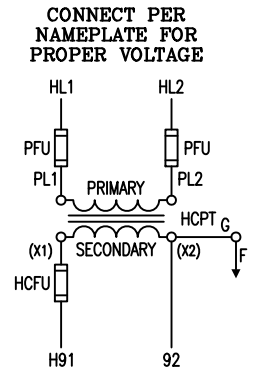

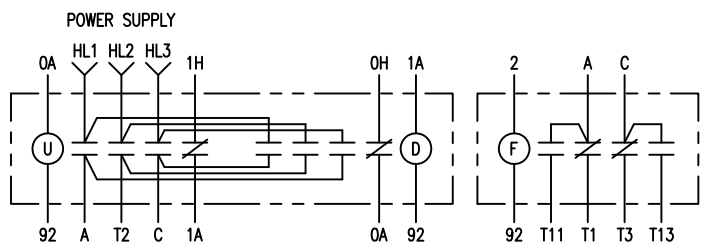

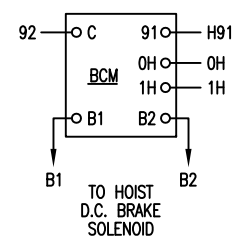

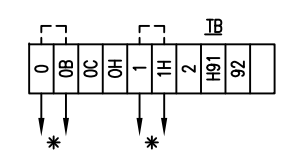

* NOTE:
TO THE UPPER AND LOWER GEAR LIMIT SWITCH. IF THE GLS IS NOT USED, JUMPER 0 TO 0B & 1 TO 1H, AS SHOWN.

ELEMENTARY DIAGRAM

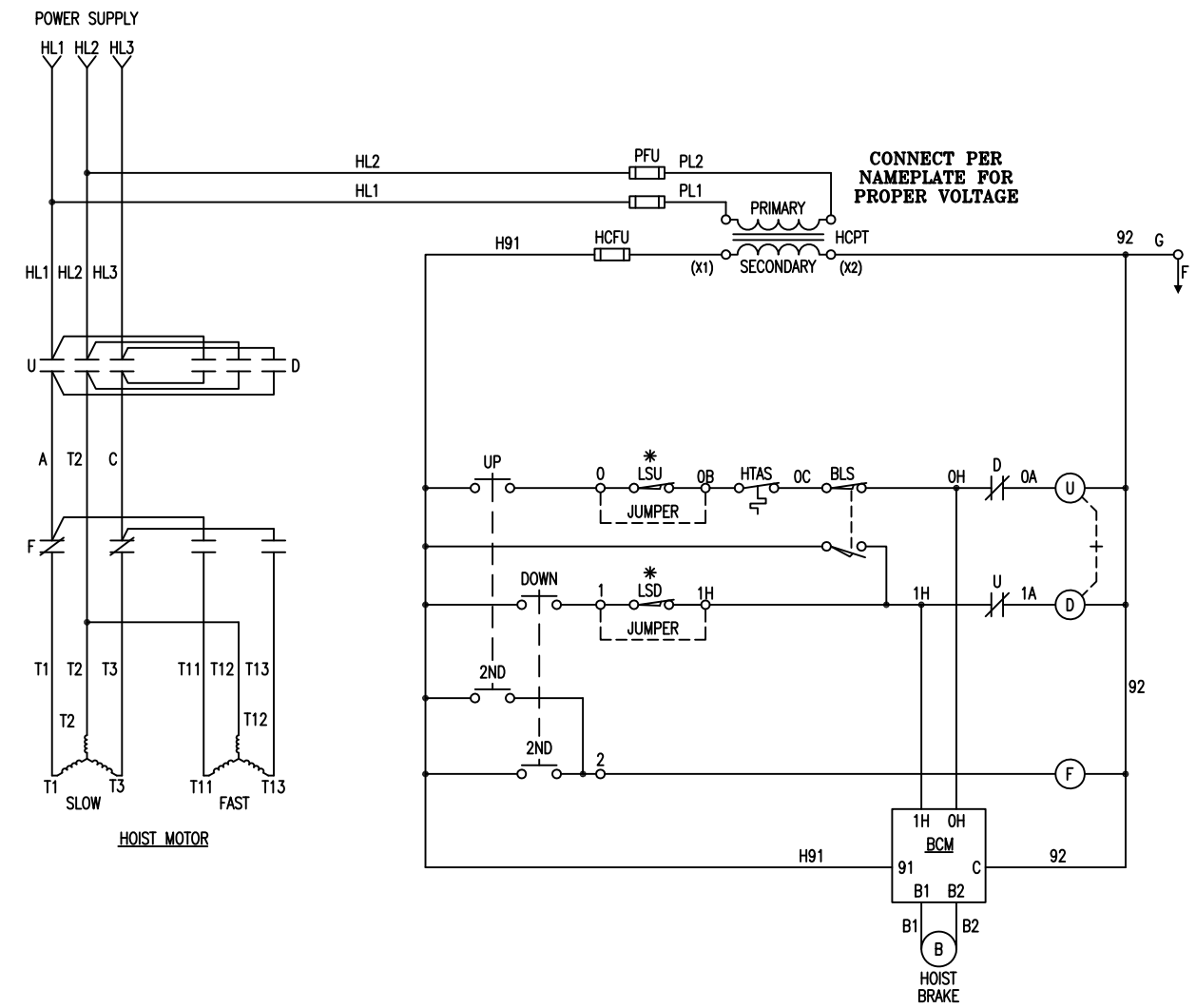

700 SERIES SIZE 2 & 3 2–SPEED HOIST

WARNING:
UNLESS HOOK RAISES WHEN "UP" PUSHBUTTON IS PRESSED, SEVERE HOIST DAMAGE AND A DROPPED LOAD MAY RESULT.
CORRECT IMPROPER HOOK DIRECTION BY INTER–CHANGING MOTOR INPUT POWER LEADS L1 AND L2. DO NOT CHANGE PUSHBUTTON WIRING.

WARNING:
THIS EQUIPMENT MUST BE EFFECTIVELY GROUNDED ACCORDING TO APPLICABLE CODES.

AVERTISSEMENT:
CET EQUIPMENT DOIT ETRE MIS A'LA TERRE EN ACCORDANCE AVEC LES NORMES EN VIGUEUR.

SYMBOL DESIGNATIONS
PFU – TRANSFORMER PRIMARY FUSING
HCPT – CONTROL CIRCUIT TRANSFORMER
HCFU – CONTROL CIRCUIT FUSING
U – HOIST UP CONTACTOR
D – HOIST DOWN CONTACTOR
F – HOIST FAST SPEED CONTACTOR
LSU – HOIST UPPER GEAR TYPE LIMIT SWITCH
LSD – HOIST LOWER GEAR TYPE LIMIT SWITCH
BLS – HOIST BLOCK OPERATED LIMIT SWITCH
BCM – D.C. BRAKE CONTROL MODULE
HTAS – HOIST MOTOR TEMPERATURE ACTUATED SWITCH
TB – TERMINAL BOARD
G – FRAME GROUND

NO.	CHANGE	DATE	ITL.	WIRING DIAGRAM	A.C.
				700 SERIES HOIST, 2–SPEED	
				WITH TAS, BLS, AND OPTIONAL GLS	
				SC. ------	YALE · LIFT-TECH division of Columbus McKinnon Corporation Muskegon, Michigan 49443
				DA. 10/11/96	
				DR. RITTER	SHEET 50 OF 99 SHEETS
				CK.	451222
				AP.	

FIRST USED ON:

FROM: 444922

Cable #		Dispositivo Conectado
HL1		U–D, PFU
HL2		U–D, PFU
HL3		U–D
PL1		PFU, HCPT
PL2		PFU, HCPT
A		U–D, F
C		U–D, F
T1		F
T2		U–D
T3		F
T11		F
T12		U–D
T13		F
0	TB	
0A		D, U
0B	TB	
0C	TB	
0H	TB	D, BCM
1	TB	
1A		U, D
1H	TB	U, BCM
2	TB	F
H91	TB	HCFU, BCM
92	TB	HCPT, G, U, D, F, BCM
B1		BCM
B2		BCM

Go To Index

Conecte por Placa de indentificacion, para el voltaje apropiado

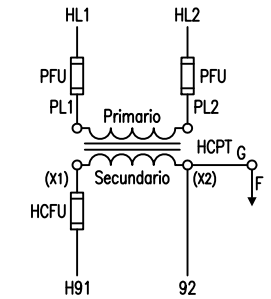

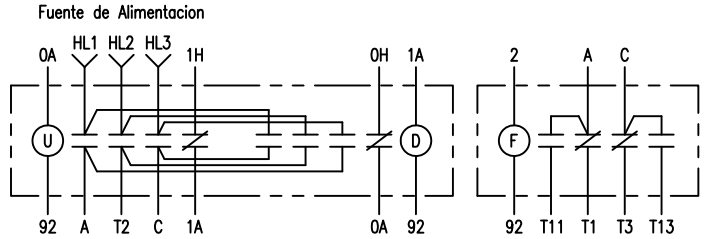

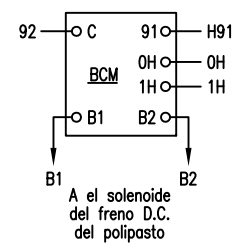

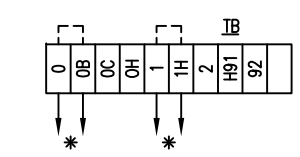

✱ NOTA:
A el Interruptor Limitador de carrera engrando.
Si el Limitador de carrera no esta en uso,
puentear 0 al 0B y el 1 al 1H como se muestra.

DIAGRAMA ELEMENTAL

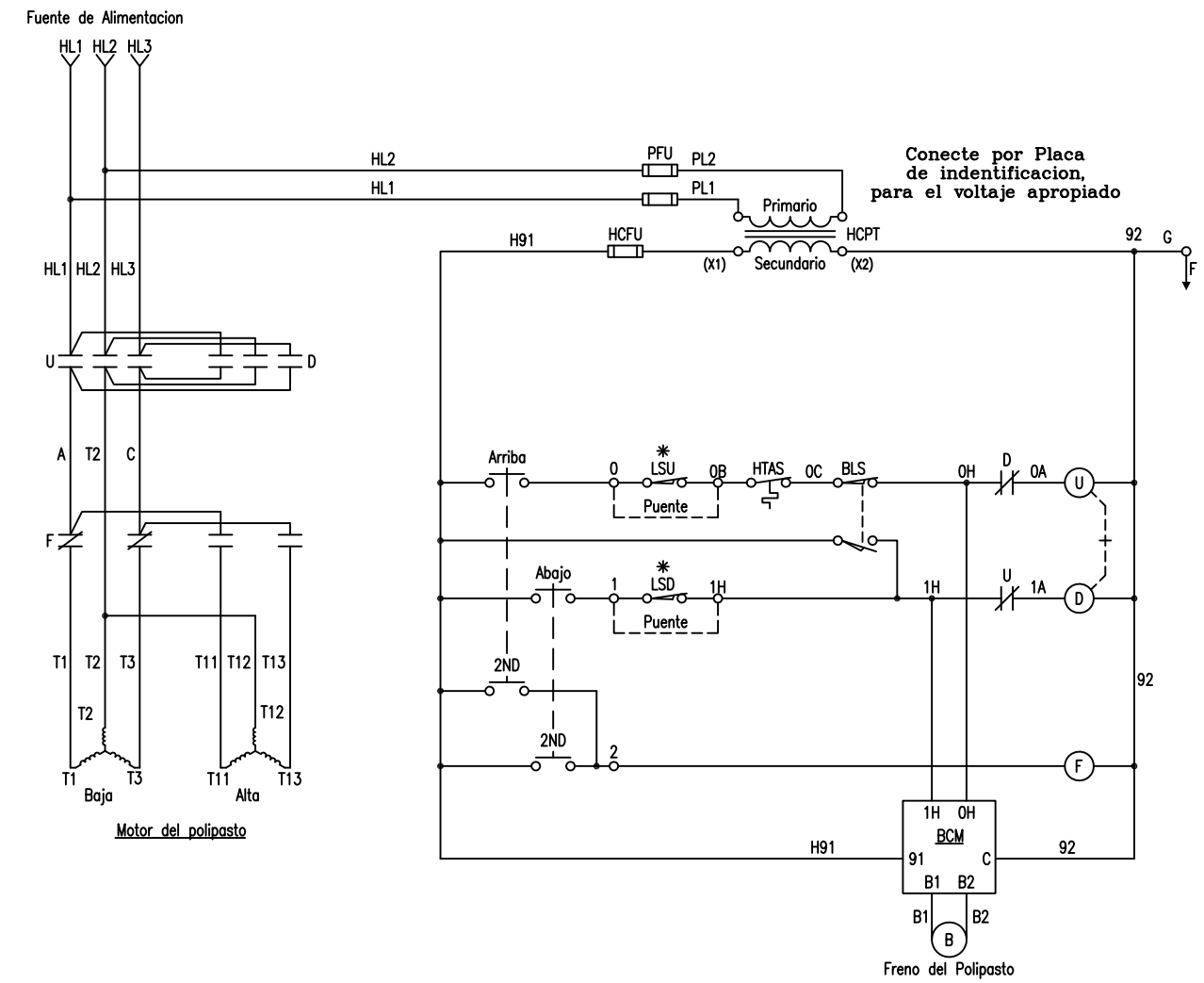

Serie 700 – Size 2 & 3
Polipasto de 2 Velocidad

⚠Advertencia

A menos que el gancho de carga se eleve cuando el boton "UP" es presionado, danos severos al polipasto, y la caida de la carga pudieran resultar.

Corrija la inapropiada direccion del gancho, intercambiando la direccion de entrada de energia del motor que conduce L1 y L2. No cambie el cableado de la botonera

⚠Advertencia

Este equipo debe ponerse a tierra de manera eficaz de acuerdo con los codigos aplicables

⚠AVERTISSEMENT:

CET EQUIPMENT DOIT ETRE MIS A'LA TERRE EN ACCORDANCE AVEC LES NORMES EN VIGUEUR.

Designaciones de Simbolos

PFU – Fusible Primario del Transformador
HCPT – Transformador del Circuito de Control
HCFU – Fusible del Circuito de Control
U – Contactor de subir del polipasto
D – Contactor de bajar del polipasto
F – Contactor de velocidad rapida del polipasto
LSU – Interruptor Limitador de carrera tipo engranado superior del polipasto
LSD – Interruptor Limitador de carrera tipo engranado inferior del polipasto
BLS – Interruptor de Limite de carrera, tipo Bloque
BCM – Modulo de Control del Freno D.C.
HTAS – Interruptor activado por temperatura del motor del polipasto
TB – Tablero de Terminales
G – Marco de tierra
F

NO.	CHANGE	DATE	ITL.	Diagrama Electrico	A.C.
1	Spanish Translation	1/23/08	MRF	Polipasto de dos velocidades Serie 700	
				con TAS, BLS y GLS opcional	
				SC. ------	YALE · LIFT-TECH division of Columbus McKinnon Corporation Muskegon, Michigan 49443
				DA. 10/11/96	
				DR. RITTER	SHEET 50 OF 99 SHEETS
				CK.	451222SP
				AP.	

FIRST USED ON:

FROM: 444922

Go To Index

ELEMENTARY DIAGRAM

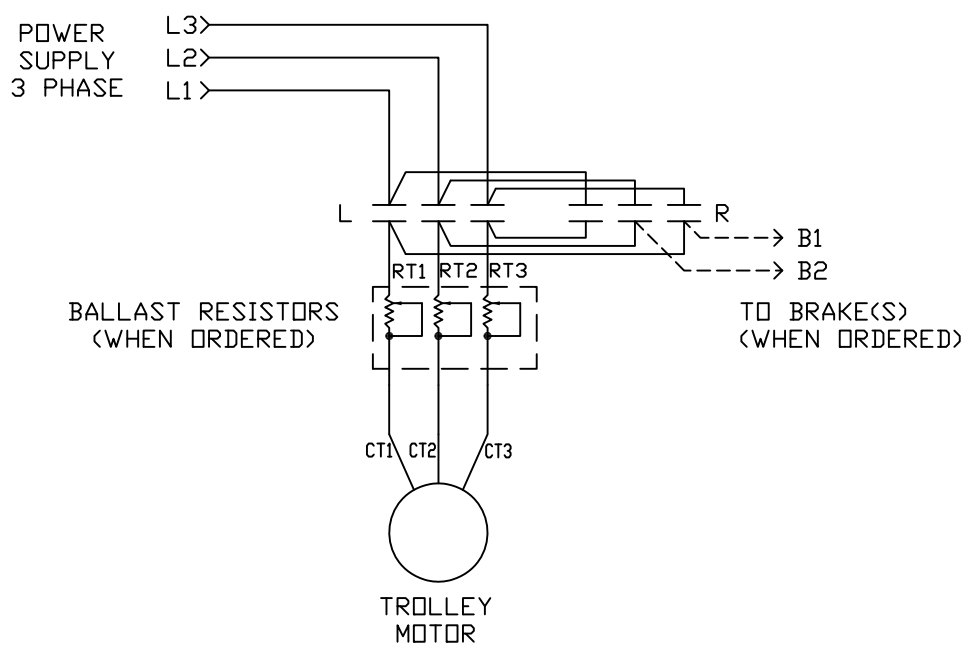

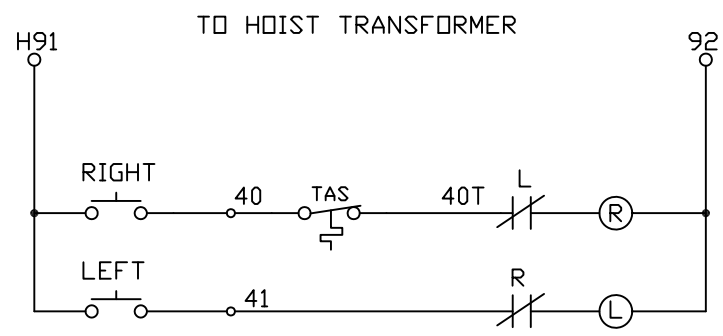

⚠ WARNING:
THIS EQUIPMENT MUST BE EFFECTIVELY GROUNDED ACCORDING TO APPLICABLE CODES.

⚠ AVERTISSEMENT:
CET EQUIPMENT DOIT ETRE MIS A'LA TERRE EN ACCORDANCE AVEC LES NORMES EN VIGUEUR.

TAS TEMPERATURE ACTUATED SWITCH

G F FRAME GROUND

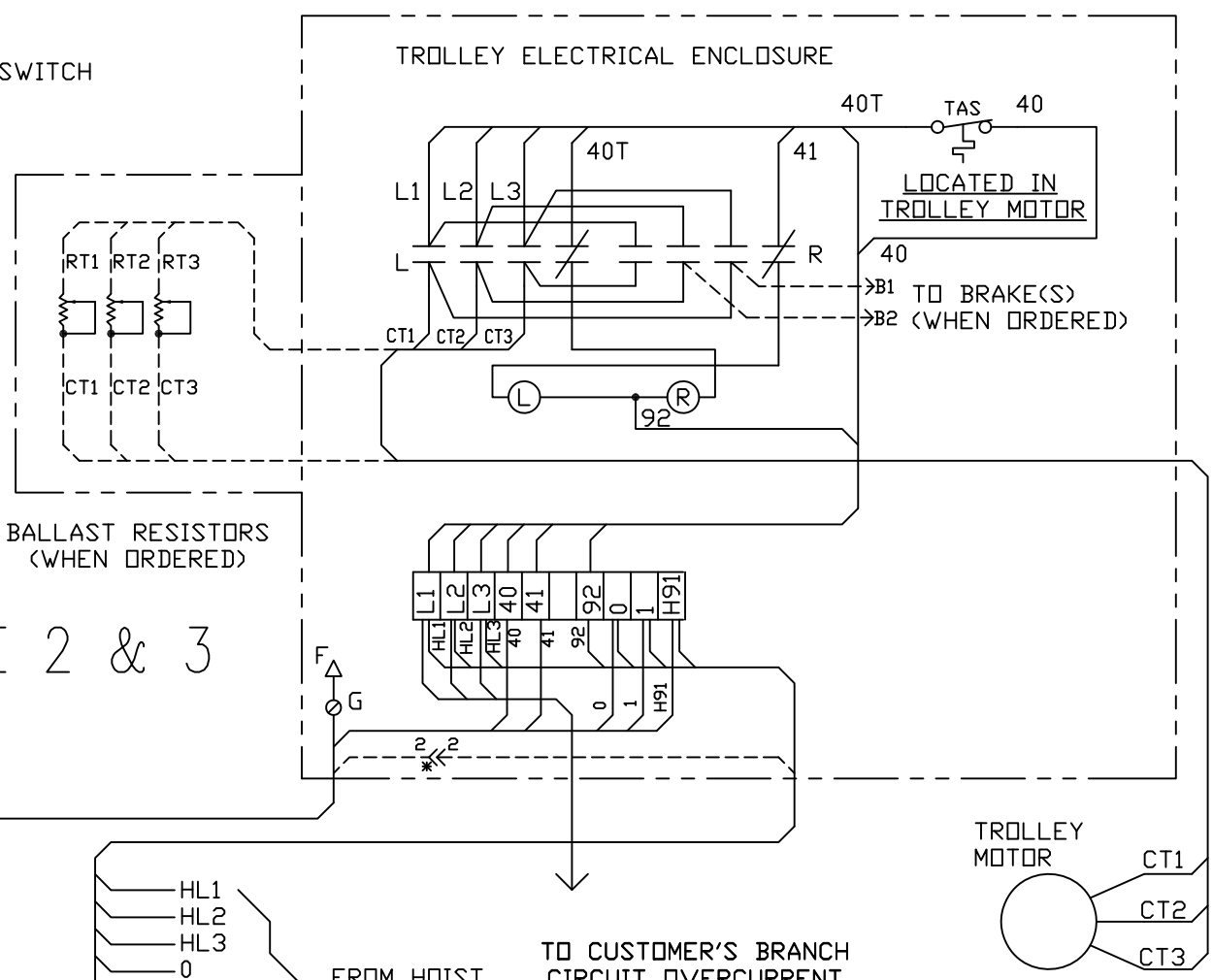

Y80/800 SERIES & 700 SERIES SIZE 2 & 3 1-SPEED TROLLEY

HL1
HL2
HL3
0
1
H91
92
2*

FROM HOIST CONTROL

TO CUSTOMER'S BRANCH CIRCUIT OVERCURRENT PROTECTION & DISCONNECT

VERIFY MOTOR CONNECTIONS PER NAMEPLATE AND CONNECTION DIAGRAM
PARALLEL 2ND MOTOR POWER LEADS WHEN (WHEN UTILIZED).
SERIES 2nd MOTOR TAS LEADS (WHEN UTIL.)

UP
HOIST
DOWN
RIGHT
TROLLEY
LEFT

PUSHBUTTON STATION

*WIRE "2" IS USED WITH 2 SPEED HOISTS ONLY. ON SINGLE SPEED HOISTS, ISOLATE WIRE "2".

NO.	CHANGE	DATE	ITL.
2	REDRAWN ON ACAD	11/89	BES

WIRING DIAGRAM– TROLLEY
CONTROL 3PHASE A.C.

MONORAIL TROLLEY

SC. ------
DA. 11/21/89
DR. B.E.S.
CK.

YALE · LIFT-TECH
division of Columbus McKinnon Corporation
Muskegon, Michigan 49443

SHEET 51 OF 99 SHEETS

451222

FIRST USED ON: ------

FROM: 329047

Go To Index

DIAGRAMA ELEMENTAL

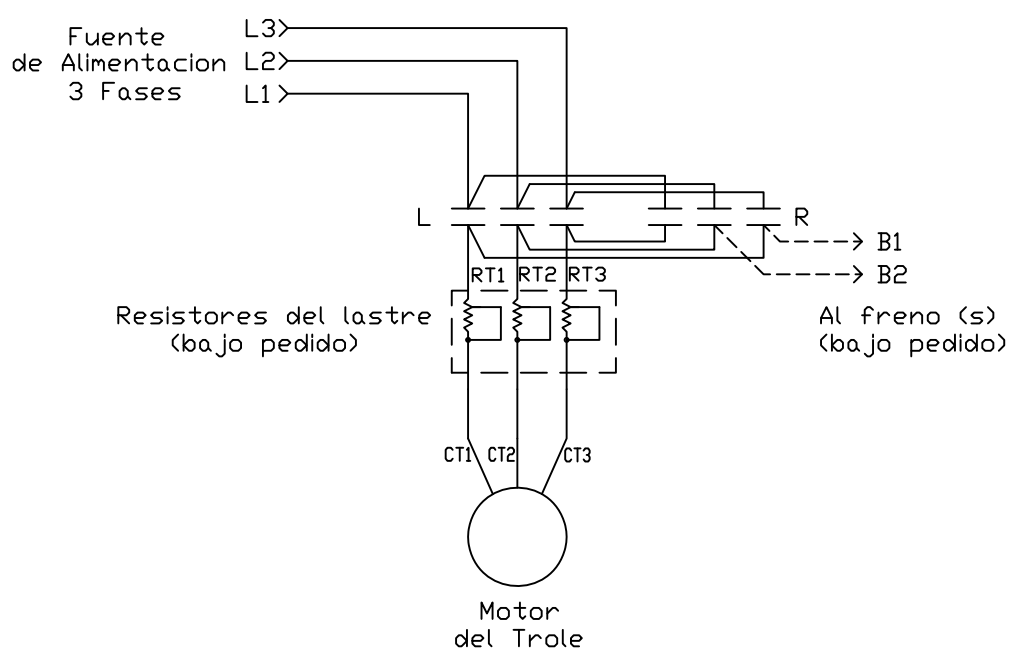

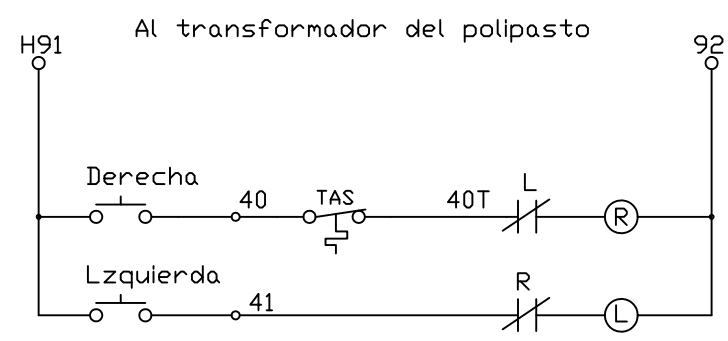

⚠ADVERTENCIA:
ESTE EQUIPO DEBE PONERSE A TIERRA DE MANERA EFICAZ DE ACUERDO CON LOS CODIGOS APLICABLES

⚠AVERTISSEMENT:
CET EQUIPMENT DOIT ETRE MIS A'LA TERRE EN ACCORDANCE AVEC LES NORMES EN VIGUEUR.

TAS Interruptor activado por temperatura

G F Marco de tierra

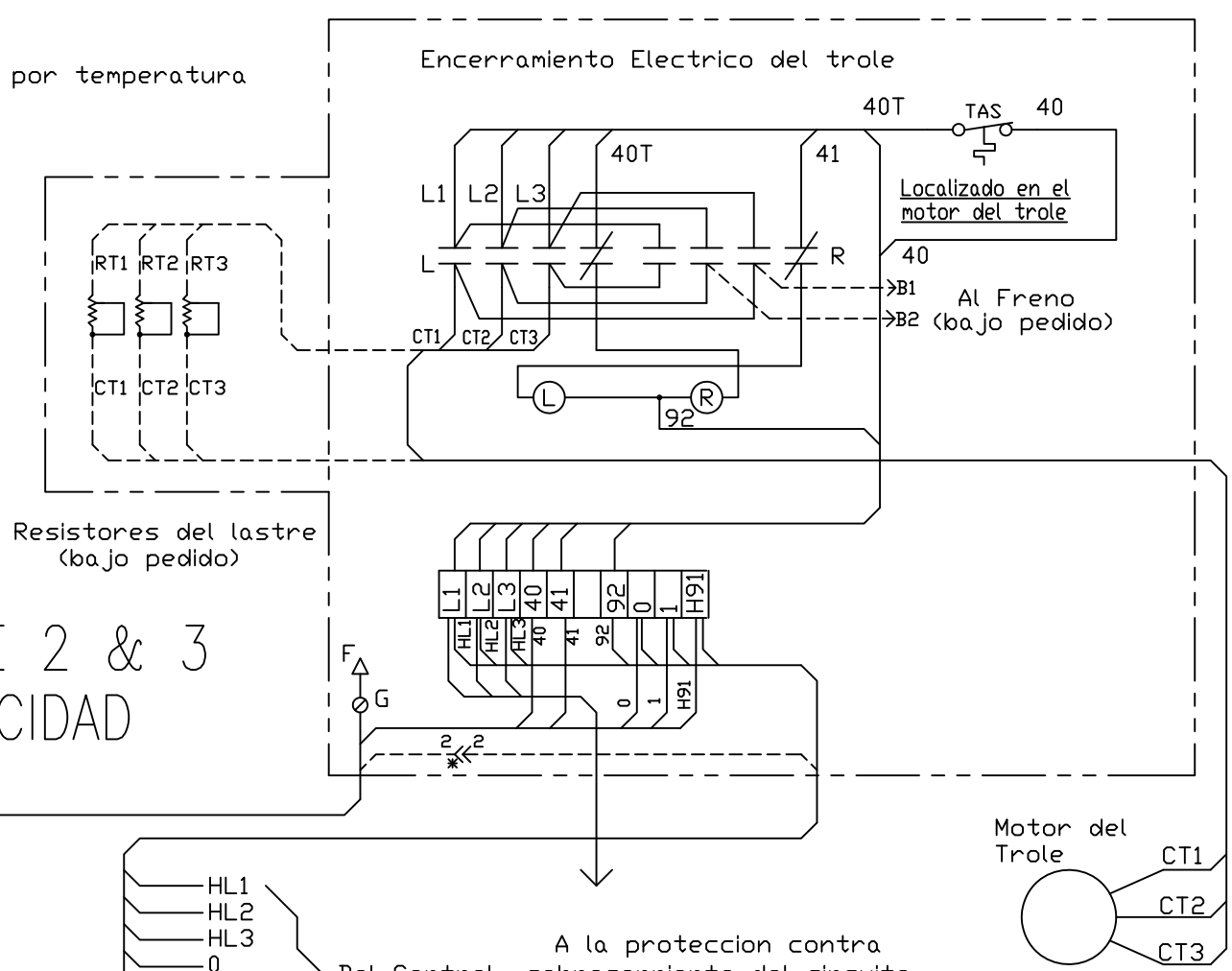

Y80/800 SERIE & 700 SERIE SIZE 2 & 3 TROLE DE 1 VELOCIDAD

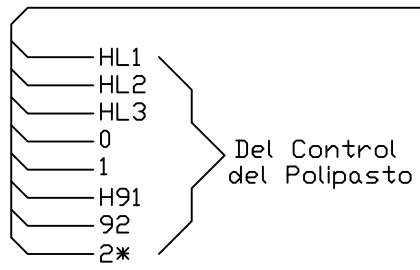

A la proteccion contra sobrecorriente del circuito del cliente y desconexion

Verifique las conexiones del motor por el diagrama de placa de identificacion y de conexion que se provee con el motor del trole. Si se utiliza un trole con motor dual, cables conductores de energia del 2do. Motor en paraledo y cables conductores de energia del TAS del 2do. Motor en serie

Botonera

*El cable "2" es usado con polipastos de 2 velocidades unicamente
En polipastos de 1 velocidad, aisle el cable "2"

NO.	CHANGE	DATE	ITL.	Diagrama Electrico – Trole
2	REDRAWN ON ACAD	11/89	BES	Control 3 Fases A.C.
3	Spanish Translation	1/25/08	MRF	
				Monorail Trole
				SC. ------
				DA. 11/21/89
				DR. B.E.S.
				CK.

YALE · LIFT-TECH
division of Columbus McKinnon Corporation
Muskegon, Michigan 49443

SHEET 51 OF 99 SHEETS

451222SP

FIRST USED ON: ------

FROM: 329047

Go To Index

ELEMENTARY DIAGRAM

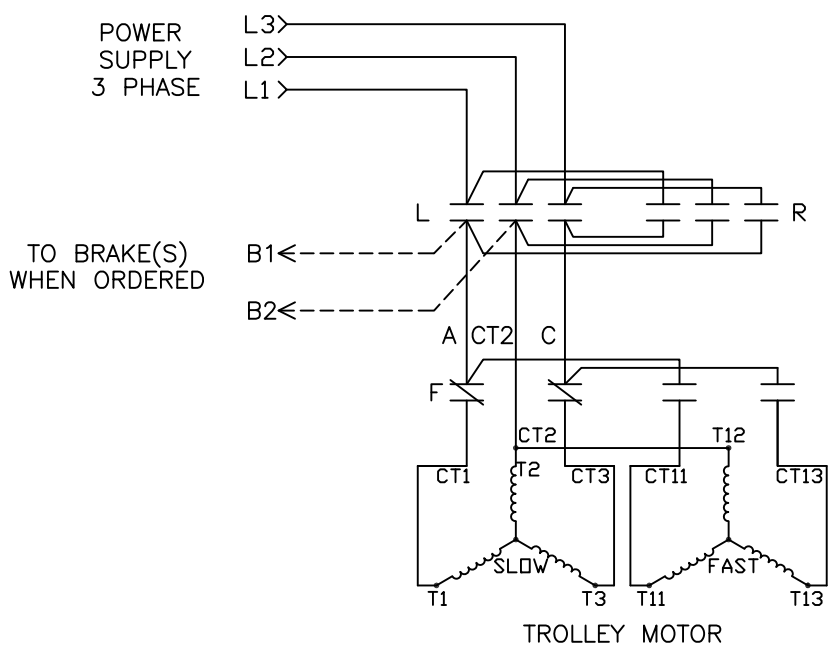

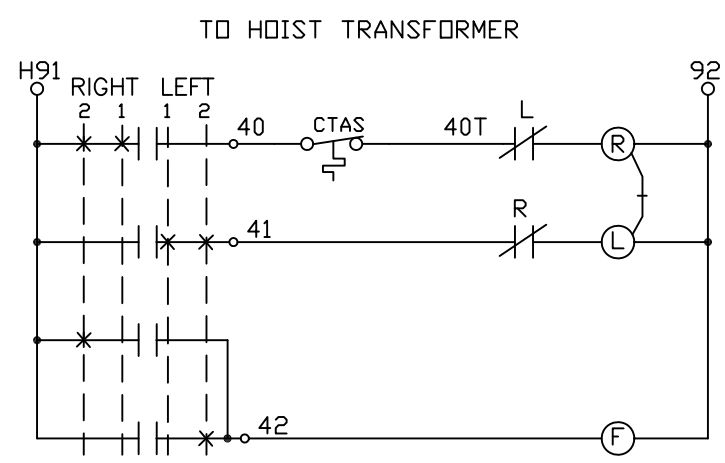

WARNING:
THIS EQUIPMENT MUST BE EFFECTIVELY GROUNDED ACCORDING TO APPLICABLE CODES.

AVERTISSEMENT:
CET EQUIPMENT DOIT ETRE MIS A'LA TERRE EN ACCORDANCE AVEC LES NORMES EN VIGUEUR.

CTAS TEMPERATURE ACTUATED SWITCH IN MOTOR

G F FRAME GROUND

Y80/800 SERIES & 700 SERIES SIZE 2 & 3 2-SPEED TROLLEY

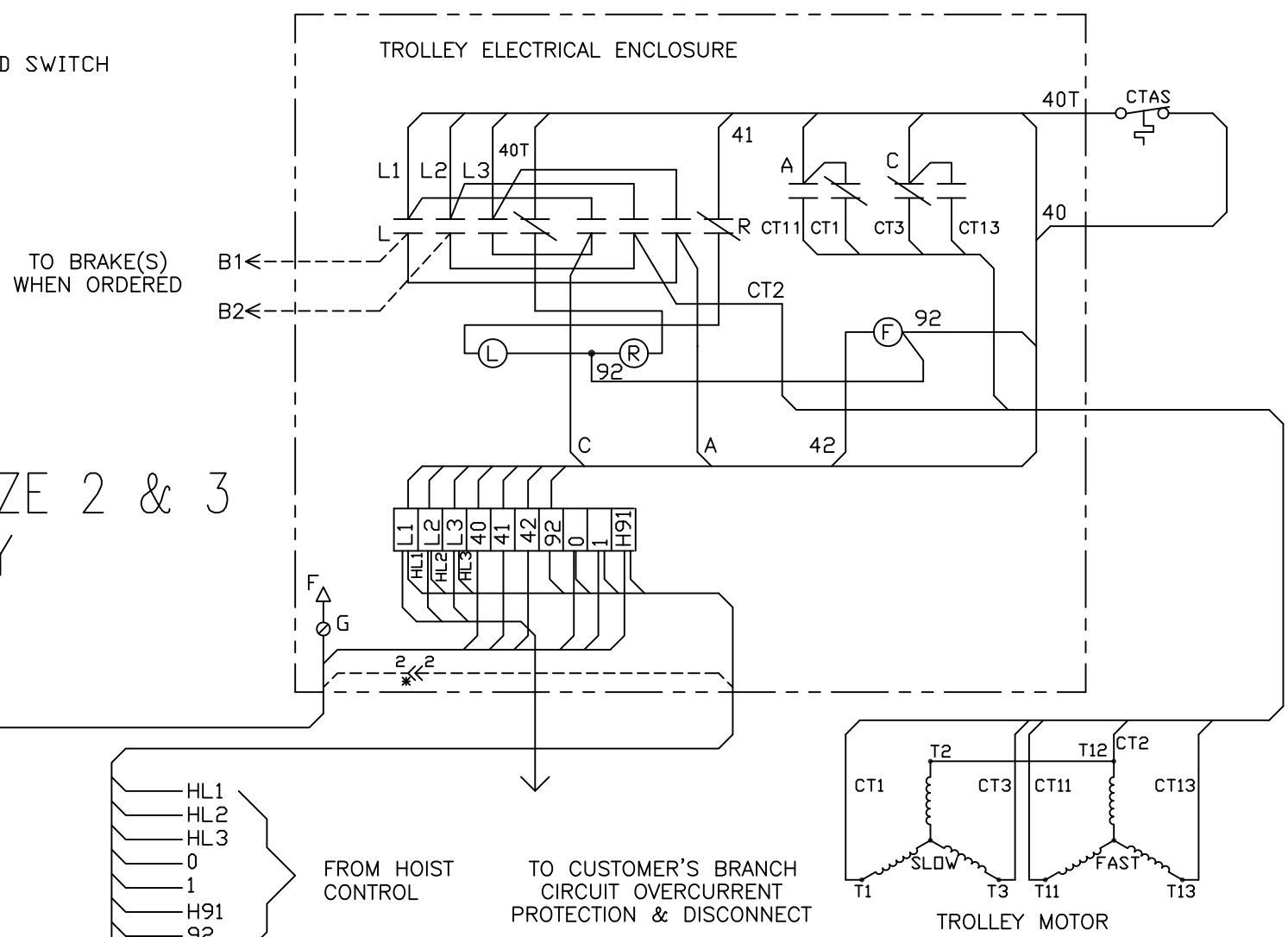

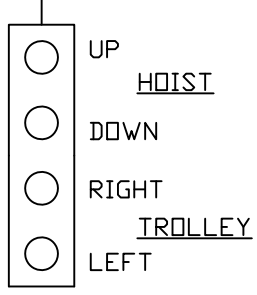

PUSHBUTTON STATION

*WIRE "2" IS USED WITH 2 SPEED HOISTS ONLY. ON SINGLE SPEED HOISTS, ISOLATE WIRE "2".

NO.	CHANGE	DATE	ITL.
1	REDRAWN ON CAD.	9/91	D.R.

WIRING DIAGRAM
TROLLEY CONTROL – 2 SPEED, 2 WDG.
3 PHASE, W/ TAS

SC. ------
DA. 7/28/87
DR. K.D.
CK.

YALE · LIFT-TECH
division of Columbus McKinnon Corporation
Muskegon, Michigan 49443

SHEET 52 OF 99 SHEETS

451222

FIRST USED ON: ------

FROM: 329700

Go To Index

DIAGRAMA ELEMENTAL

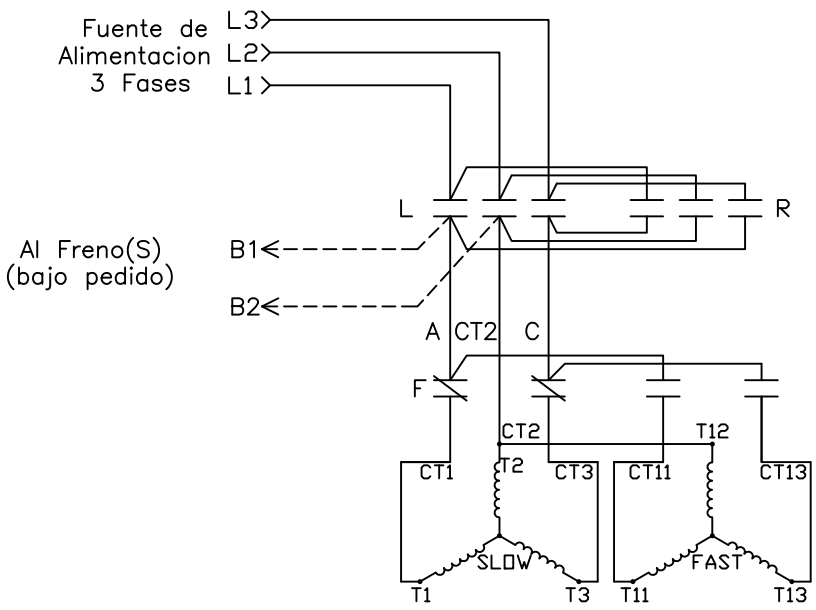

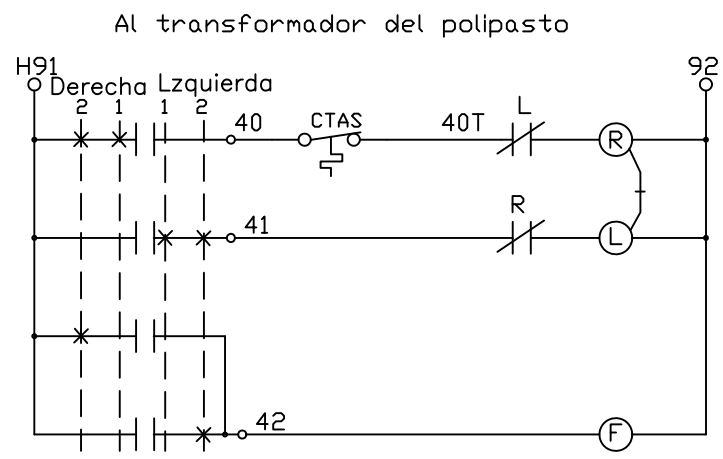

ADVERTENCIA

Este equipo debe ponerse a tierra de manera eficaz de acuerdo con los codigos aplicables

AVERTISSEMENT:

CET EQUIPMENT DOIT ETRE MIS A'LA TERRE EN ACCORDANCE AVEC LES NORMES EN VIGUEUR.

CTAS Interruptor activado por temperatura en el motor

G F Marco de tierra

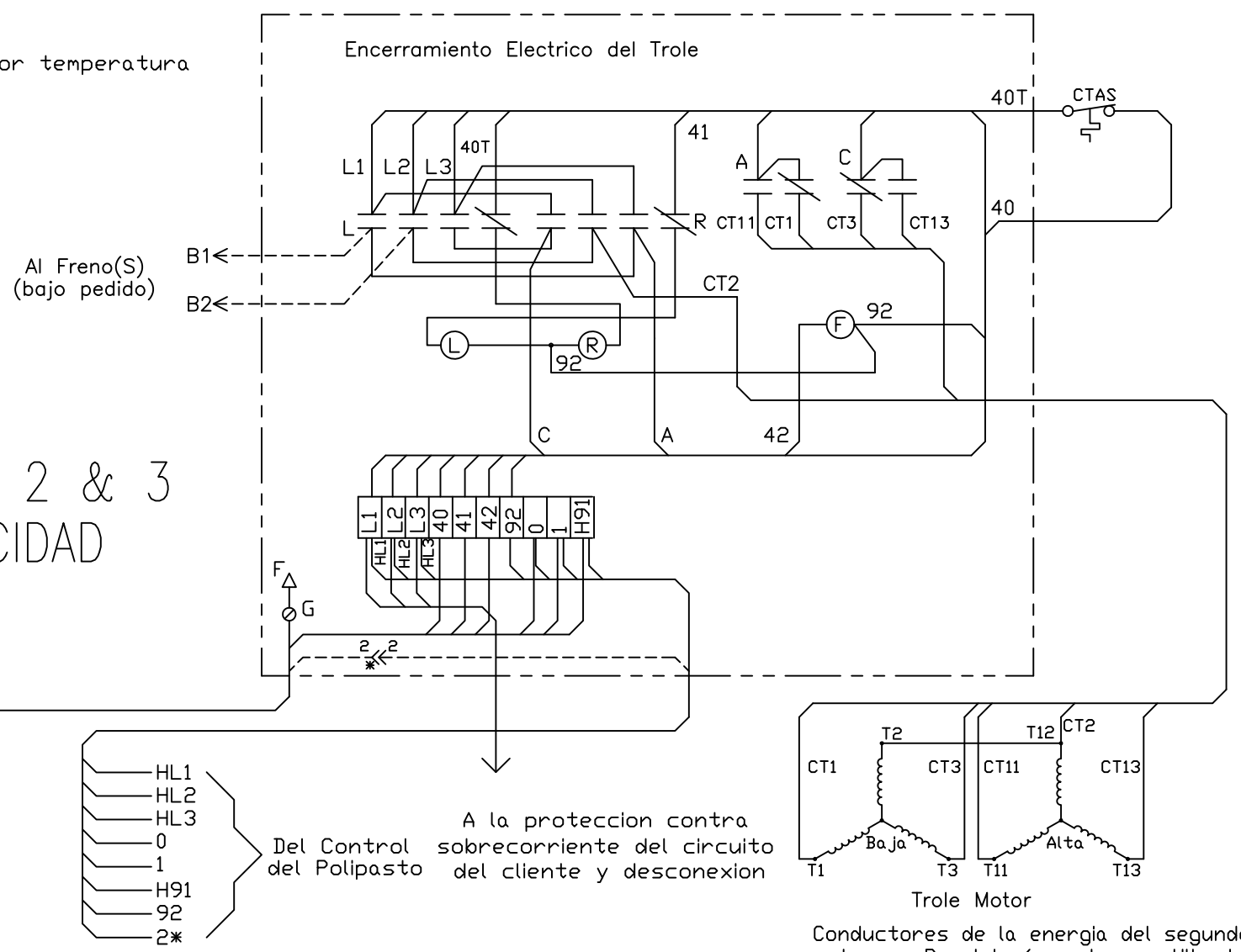

*El cable "2" es usado con polipastos de 2 velocidades unicamente
En polipastos de 1 velocidad, aisle el cable "2"

Conductores de la energia del segundo motor en Paralelo (cuando es utilizado)
Conductores del TAS del segundo motor en Serie (cuando es utilizado)

Y80/800 SERIE & 700 SERIE SIZE 2 & 3 TROLE DE 2 VELOCIDAD

NO.	CHANGE	DATE	ITL.
1	REDRAWN ON CAD.	9/91	D.R.
2	Spanish Translation	1/28/08	MRF

Diagrama Electrico
Trole Control – 2 Velocidad, 2 WDG.
3 Fase, W/ TAS

SC. ------
DA. 7/28/87
DR. K.D.
CK.

YALE · LIFT-TECH
division of Columbus McKinnon Corporation
Muskegon, Michigan 49443

SHEET 52 OF 99 SHEETS

45122SP

FIRST USED ON: ------

FROM: 329700

WIRE #		DEVICE CONNECTED
L1		HFU, PPD
L2		HFU, PPD
L3		HFU, PPD
HL1		HFU, U-D, PFU
HL2		HFU, U-D, PFU
HL3		HFU, U-D
PL1		PFU, HCPT
PL2		PFU, HCPT
A		U-D, F
C		U-D, F
HO1		F, HSOL
HO2		U-D, HSOL, HFOL
HO3		F, HSOL
HO11		F, HFOL
HO13		F, HFOL
HT1		HSOL
HT2		HSOL
HT3		HSOL
HT11		HFOL
HT12		HFOL
HT13		HFOL
0	TB	OLC
0A		D, U, MC
0B	TB	MC
0C	TB	HSOL
0D		HSOL, HFOL
0E		HFOL, OLC, MC
0H		OLC, D, BCM
1	TB	
1A		U, D, MC
1H	TB	U, BCM
2	TB	TDR
2A	TB	TDR, F, MC
19	TB	OLC
H91	TB	PPD, BCM, MC
H91A		HCFU, PPD
92	TB	HCPT, OLC, U, D, F, BCM, MC
HB1		BCM
HB2		BCM

Go To Index

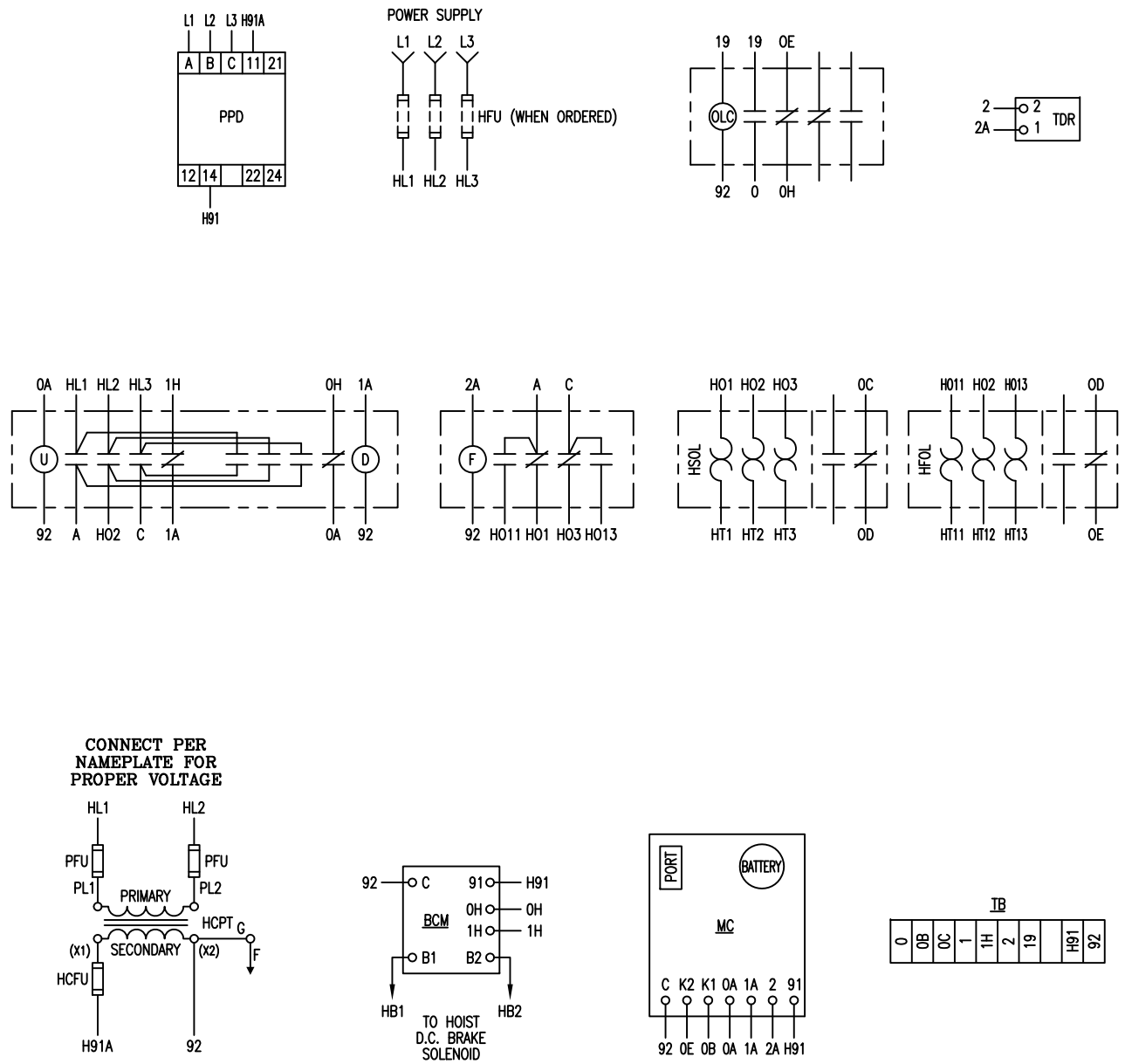

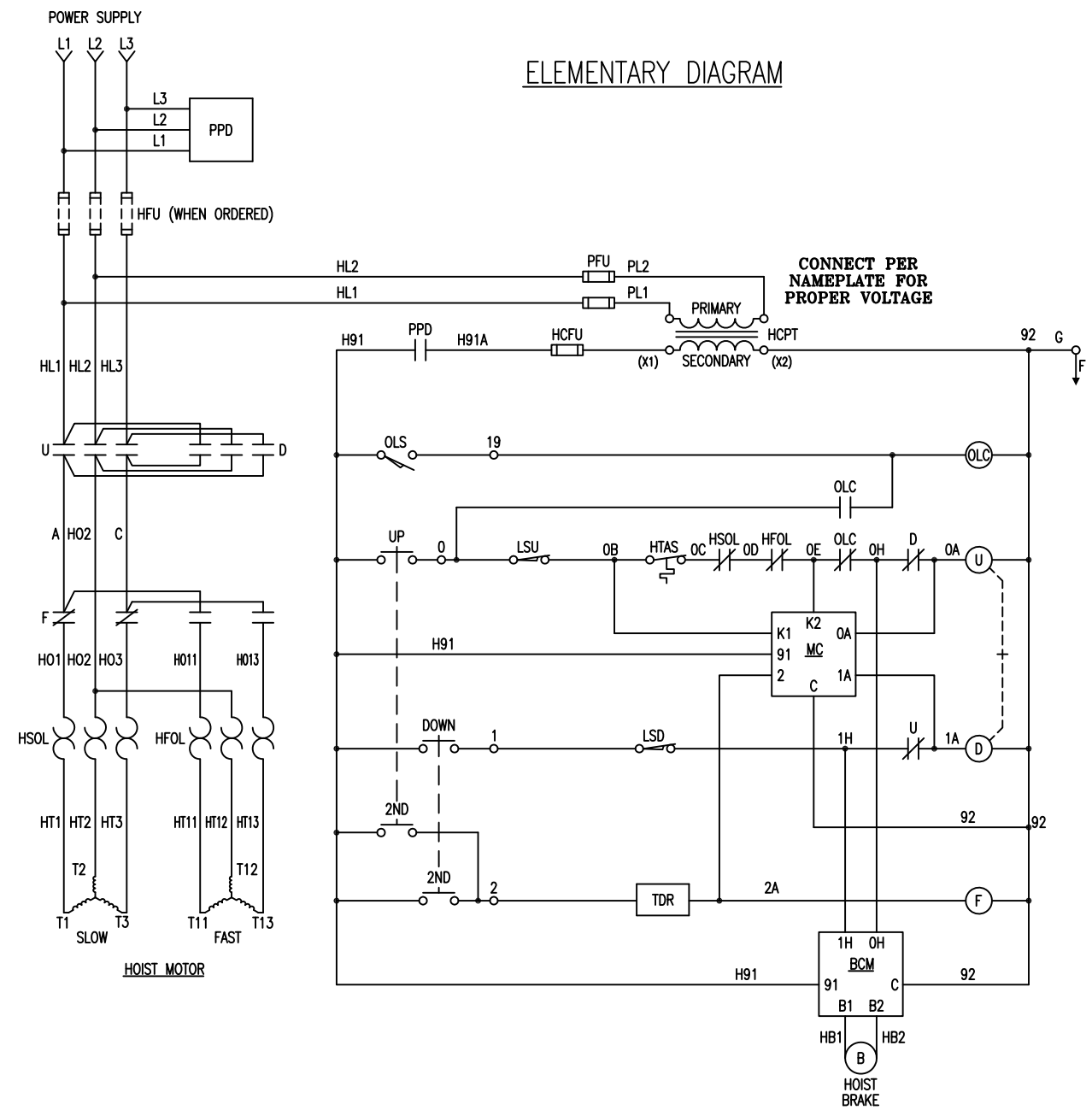

WORLD SERIES & GLOBAL FEM DESIGN 2-SPEED HOIST

⚠WARNING:
(PPD) – PHASE REVERSAL/LOSS PROTECTION DEVICE SHOWS A STEADY AMBER LED WHEN IN PHASE REVERSAL CONDITION.
CORRECT IMPROPER PHASING BY INTER-CHANGING INPUT POWER LEADS L1 AND L2. DO NOT CHANGE PUSHBUTTON OR MOTOR CIRCUIT WIRING.

⚠WARNING:
THIS EQUIPMENT MUST BE EFFECTIVELY GROUNDED ACCORDING TO APPLICABLE CODES.

⚠AVERTISSEMENT:
CET EQUIPMENT DOIT ETRE MIS A'LA TERRE EN ACCORDANCE AVEC LES NORMES EN VIGUEUR.

SYMBOL DESIGNATIONS
PPD – PHASE REV./LOSS PROTECTION DEVICE
HFU – HOIST MOTOR CIRCUIT FUSING
PFU – TRANSFORMER PRIMARY FUSING
HCPT – CONTROL CIRCUIT TRANSFORMER
HCFU – CONTROL CIRCUIT FUSING
U – HOIST UP CONTACTOR
D – HOIST DOWN CONTACTOR
F – HOIST FAST SPEED CONTACTOR
HSOL – HOIST SLOW SPEED THERMAL OVERLOAD RELAY
HFOL – HOIST FAST SPEED THERMAL OVERLOAD RELAY
LSU – HOIST UPPER GEAR TYPE LIMIT SWITCH
LSD – HOIST LOWER GEAR TYPE LIMIT SWITCH
BCM – D.C. BRAKE CONTROL MODULE
TDR – TIMER DELAY MODULE
HTAS – HOIST MOTOR TEMPERATURE ACTUATED SWITCH
OLS – OVERLOAD LIMIT SWITCH
OLC – OVERLOAD LIMIT SWITCH CONTACTOR
MC – MONITOR CARD
TB – TERMINAL BOARD
G – FRAME GROUND

NO.	CHANGE	DATE	ITL.	WIRING DIAGRAM A.C.
1	ADDED NODE NUMBERS TO TIMER	02/08/06	SJDA	2-SPEED HOIST
				WITH TAS, GLS, OLS, HOL, TIME DELAY RELAY,
				MONITOR CARD, AND OPTIONAL FUSES
				SC. ------
				DA. 12/21/05
				DR. SJDA
				CK.
				AP.

YALE · LIFT-TECH Division of Columbus McKinnon Corporation Muskegon, Michigan 49443

SHEET 53 OF 99 SHEETS

451222

FIRST USED ON: ------

FROM: 450655

Cable #		Dispositivo Conectado
L1		HFU, PPD
L2		HFU, PPD
L3		HFU, PPD
HL1		HFU, U–D, PFU
HL2		HFU, U–D, PFU
HL3		HFU, U–D
PL1		PFU, HCPT
PL2		PFU, HCPT
A		U–D, F
C		U–D, F
HO1		F, HSOL
HO2		U–D, HSOL, HFOL
HO3		F, HSOL
HO11		F, HFOL
HO13		F, HFOL
HT1		HSOL
HT2		HSOL
HT3		HSOL
HT11		HFOL
HT12		HFOL
HT13		HFOL
0	TB	OLC
0A		D, U, MC
0B	TB	MC
0C	TB	HSOL
0D		HSOL, HFOL
0E		HFOL, OLC, MC
0H		OLC, D, BCM
1	TB	
1A		U, D, MC
1H	TB	U, BCM
2	TB	TDR
2A	TB	TDR, F, MC
19	TB	OLC
H91	TB	PPD, BCM, MC
H91A		HCFU, PPD
92	TB	HCPT, OLC, U, D, F, BCM, MC
HB1		BCM
HB2		BCM

Go To Index

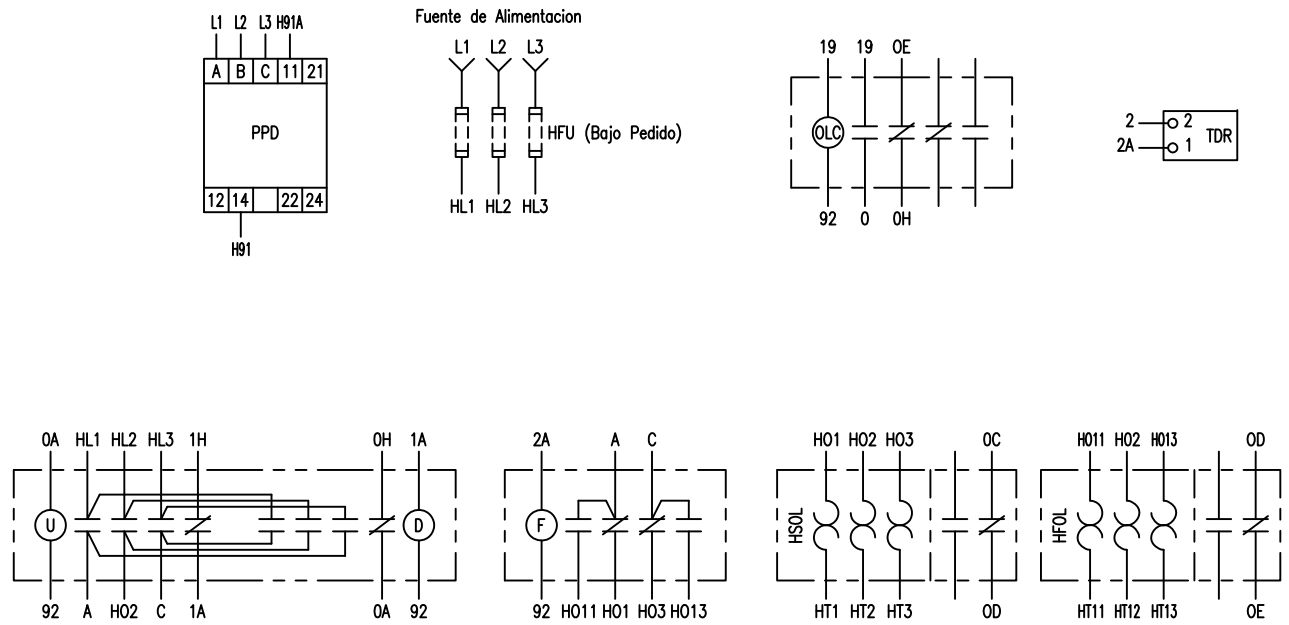

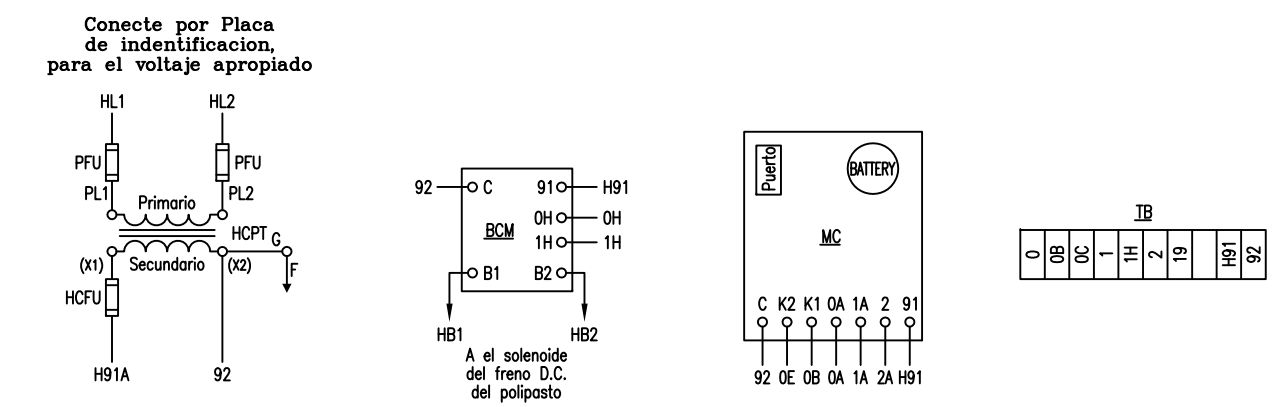

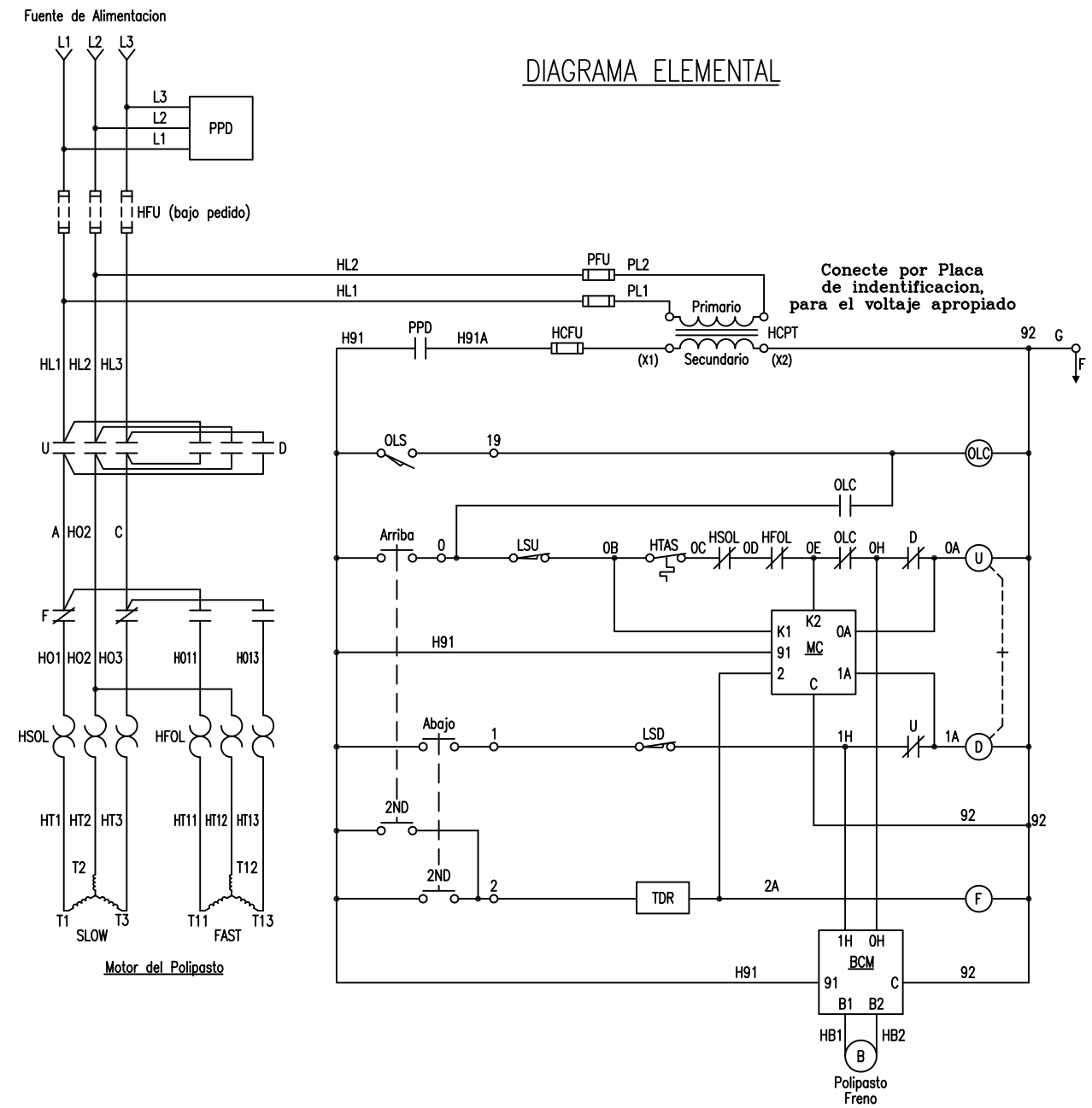

POLIPASTO DE 2 VELOCIDADES WORLD SERIES y GLOBAL FEM

⚠ADVERTENCIA:

(PPD) – Dispositivo de Revocacion de fase/Proteccion de perdida, muestra un LED ambar fijo, cuando se encuentra en condicion de revocacion de fase
Corrija la inapropiada fase, intercambiando la direccion de entrada de energia del motor que conduce L1 y L2.
No cambie el cableado del circuito de la botonera o del motor

⚠ADVERTENCIA:

Este equipo debe ponerse a tierra de manera eficaz de acuerdo con los codigos aplicables

⚠AVERTISSEMENT:

CET EQUIPMENT DOIT ETRE MIS A'LA TERRE EN ACCORDANCE AVEC LES NORMES EN VIGUEUR.

Designaciones de Simbolos

PPD – Dispositivo de Revocacion de fase/Proteccion de perdida
HFU – Fusible del Circuito del motor de polipasto
PFU – Fusible Primario del Transformador
HCPT – Transformador del Circuito de Control
HCFU – Fusible del Circuito de Control
U – Contactor de subir del polipasto
D – Contactor de bajar del polipasto
F – Contactor de rapida velocidad del polipasto
HSOL – Relevador termico de sobrecarga de polipasto de baja velocidad
HFOL – Relevador termico de sobrecarga de polipasto de alta velocidad
LSU – Interruptor Limitador de carrera tipo engranado superior del polipasto
LSD – Interruptor Limitador de carrera tipo engranado inferior del polipasto
BCM – Modulo de Control del Freno D.C.
TDR – Modulo de Retraso
HTAS – Interruptor activado por temperatura del motor del polipasto
OLS – Interruptor limitador de sobrecarga
OLC – Contactor del Interruptor limitador de sobrecarga
MC – Tarjeta del monitor
TB – Tablero de Terminales
G – Marco de Tierra
F

NO.	CHANGE	DATE	ITL.	Daigramo Electrico	A.C.
1	ADDED NODE NUMBERS TO TIMER	02/08/06	SJDA	2–Velocidad Polipasto	
2	Spanish Translation	/28/08	MRF	With TAS, GLS, OLS, HOL, Tarjeta del Monitor,	
				Relevador de Retraso, Fusibles Opcionales	
				SC. ------	YALE · LIFT-TECH Division of Columbus McKinnon Corporation Muskegon, Michigan 49443
				DA. 12/21/05	
				DR. SJDA	SHEET 53 OF 99 SHEETS
				CK.	451222SP
				AP.	

FIRST USED ON

FROM: 450655

WIRE #		DEVICE CONNECTED
L1		CFU
L2		CFU
L3		CFU
CL1		CFU, R-L
CL2		CFU, R-L
CL3		CFU, R-L
D		R-L, FC
F		R-L, FC
CO1		FC, CSOL
CO2		R-L, CSOL
CO3		FC, CSOL
CO11		FC, CFOL
CO12		R-L, CFOL
CO13		FC, CFOL
CT1		CSOL
CT2		CSOL
CT3		CSOL
CT11		CFOL
CT12		CFOL
CT13		CFOL
40	TB	
40A		L, R
40B	TB	CSOL
40C		CSOL, CFOL
40D		CFOL, L
41	TB	R
41A		R, L
42	TB	FC
H91	TB	
92	TB	R, L, FC
CB1	TB	
CB2	TB	

Go To Index

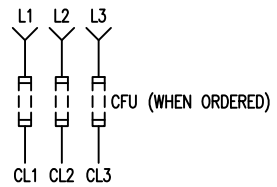

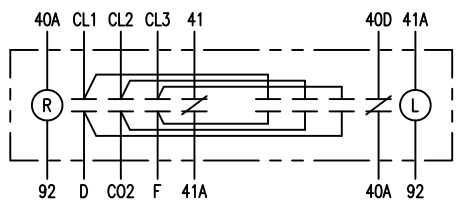

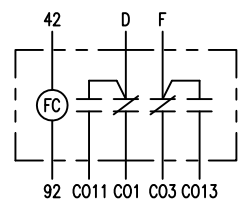

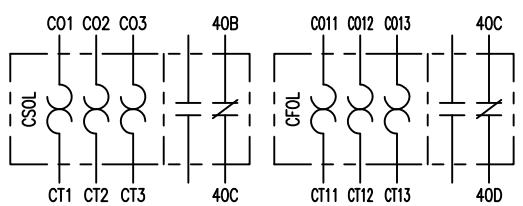

TB

40	40B	41	42		H91	92		CB1	CB2

ELEMENTARY DIAGRAM

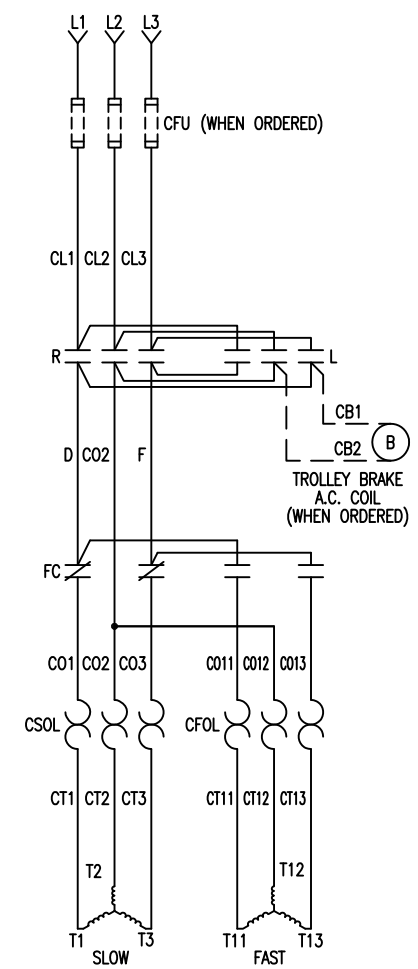

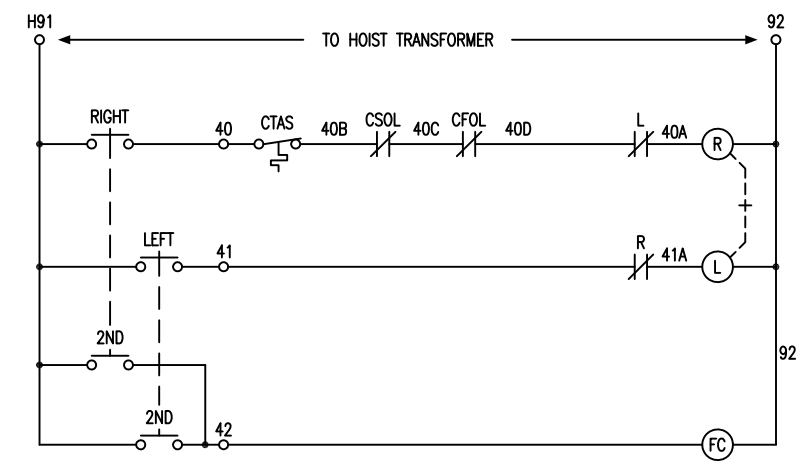

WARNING:
THIS EQUIPMENT MUST BE EFFECTIVELY GROUNDED ACCORDING TO APPLICABLE CODES.

AVERTISSEMENT:
CET EQUIPMENT DOIT ETRE MIS A'LA TERRE EN ACCORDANCE AVEC LES NORMES EN VIGUEUR.

SYMBOL DESIGNATIONS
- CFU – TROLLEY MOTOR CIRCUIT FUSING
- R – TROLLEY RIGHT CONTACTOR
- L – TROLLEY LEFT CONTACTOR
- FC – TROLLEY FAST CONTACTOR
- CSOL – TROLLEY SLOW SPEED THERMAL OVERLOAD RELAY
- CFOL – TROLLEY FAST SPEED THERMAL OVERLOAD RELAY
- CTAS – TROLLEY MOTOR TEMPERATURE ACTIVATED SWITCH
- TB – TERMINAL BOARD
- G – FRAME GROUND (F)

WORLD SERIES & GLOBAL FEM DESIGN 2-SPEED TROLLEY

NO.	CHANGE	DATE	ITL.	WIRING DIAGRAM A.C.
				2-SPEED TROLLEY
				WITH OPTIONAL FUSES, THERMAL OVERLOAD RELAYS
				SC. ------
				DA. 8/3/95
				DR. TLB
				CK.
				AP.

YALE · LIFT-TECH
Division of Columbus McKinnon Corporation
Muskegon, Michigan 49443

SHEET 54 OF 99 SHEETS

451222

FIRST USED ON: ------

FROM: 443902

Cable #		Dispositivo Conectado
L1		CFU
L2		CFU
L3		CFU
CL1		CFU, R–L
CL2		CFU, R–L
CL3		CFU, R–L
D		R–L, FC
F		R–L, FC
CO1		FC, CSOL
CO2		R–L, CSOL
CO3		FC, CSOL
CO11		FC, CFOL
CO12		R–L, CFOL
CO13		FC, CFOL
CT1		CSOL
CT2		CSOL
CT3		CSOL
CT11		CFOL
CT12		CFOL
CT13		CFOL
40	TB	
40A		L, R
40B	TB	CSOL
40C		CSOL, CFOL
40D		CFOL, L
41	TB	R
41A		R, L
42	TB	FC
H91	TB	
92	TB	R, L, FC
CB1	TB	
CB2	TB	

Go To Index

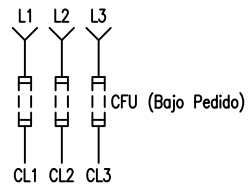

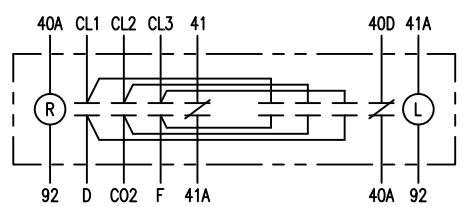

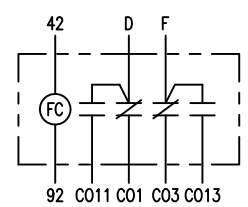

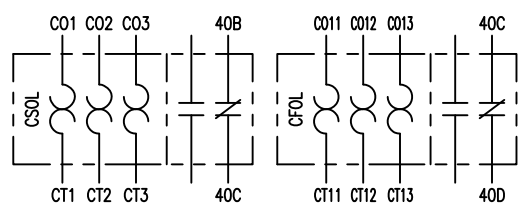

TB

40	40B	41	42		H91	92		CB1	CB2

DIAGRAMA ELEMENTAL

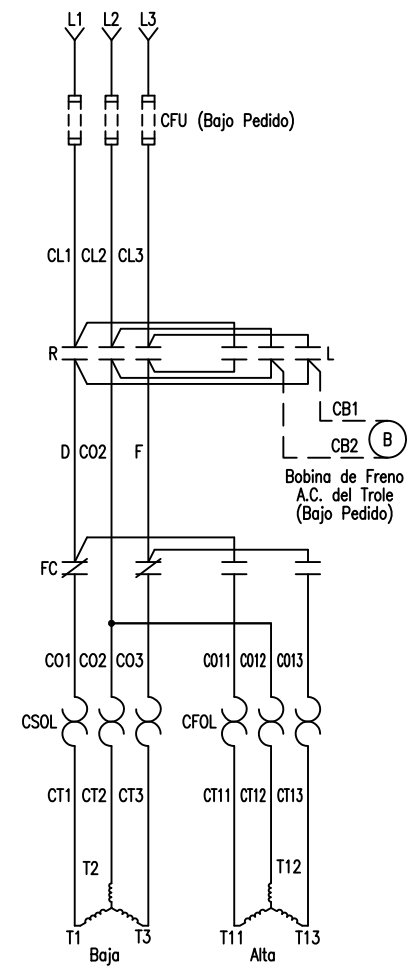

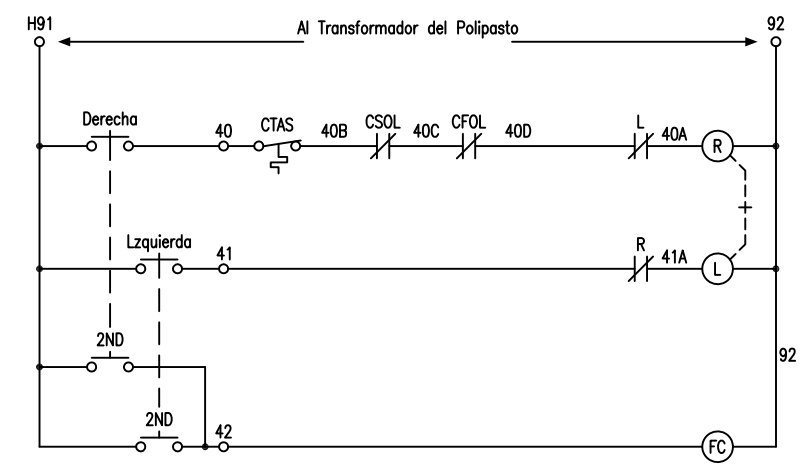

WORLD SERIES y GLOBAL TROLE DE 2–VELOCIDADES DISENO FEM

⚠ADVERTENCIA:

ESTE EQUIPO DEBE PONERSE A TIERRA DE MANERA EFICAZ DE ACUERDO CON LOS CODIGOS APLICABLES

⚠AVERTISSEMENT:

CET EQUIPMENT DOIT ETRE MIS A'LA TERRE EN ACCORDANCE AVEC LES NORMES EN VIGUEUR.

DESIGNACIONES DE SIMBOLOS

CFU – Fusible del circuito del motor trole
R – Contactor derecho del trole
L – Contactor Izquierdo del trole
FC – Contactor rapido del trole
CSOL – Relevador termico de sobrecarga para trole de baja velocidad
CFOL – Relevador termico de sobrecarga para trole de alta velocidad
CTAS – Interruptor activado por temperatura del motor del trole
TB – Tablero de Terminales
G – Marco de Tierra

NO.	CHANGE	DATE	ITL.	
1	Spanish Translation	1/28/08	MRF	

Diagramo Electrico — A.C.
2–Velocidad Trole
Fusibles opcionales, Relevador termico de subrecarga

SC. ------
DA. 8/3/95
DR. TLB
CK.
AP.

YALE · LIFT-TECH
Division of Columbus McKinnon Corporation
Muskegon, Michigan 49443

SHEET 54 OF 99 SHEETS

451222SP

FIRST USED ON: ------

FROM: 443902

WIRE #		DEVICE CONNECTED
L1		HFU
L2		HFU
L3		HFU
HL1		HFU, U–D, PFU
HL2		HFU, U–D, PFU
HL3		HFU, U–D
PL1		PFU, HCPT
PL2		PFU, HCPT
HT1		U–D
HT2		U–D
HT3		U–D
0	TB1	
0A		D, U
0B	TB1	
0C	TB1	
0H	TB1	D
1	TB1	
1A		U, D
1H	TB1	U
H91	TB1	HCFU
92	TB1	HCPT, G, U, D
HB1	TB2	U–D
HB2	TB2	U–D
HB3 **	TB2	U–D

Go To Index

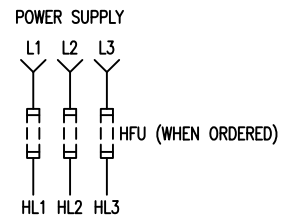

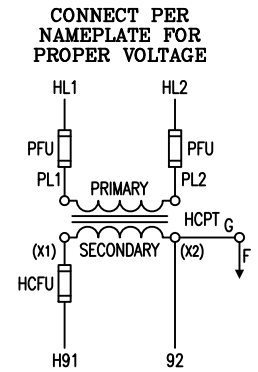

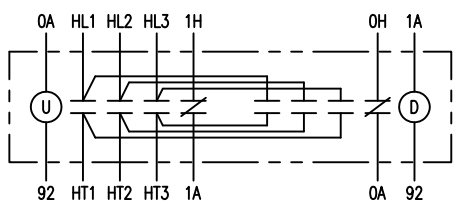

TB1

0	0B	0C	0H		1	1H		H91	92

TB2

HB1	HB2	HB3**							

** HB3 NEEDED ONLY WHEN A 3–PHASE BRAKE IS CONNECTED.

WARNING:

UNLESS HOOK RAISES WHEN "UP" PUSHBUTTON IS PRESSED, SEVERE HOIST DAMAGE AND A DROPPED LOAD MAY RESULT.

CORRECT IMPROPER HOOK DIRECTION BY INTER–CHANGING MOTOR INPUT POWER LEADS L1 AND L2. DO NOT CHANGE PUSHBUTTON WIRING.

WARNING:

THIS EQUIPMENT MUST BE EFFECTIVELY GROUNDED ACCORDING TO APPLICABLE CODES.

AVERTISSEMENT:

CET EQUIPMENT DOIT ETRE MIS A'LA TERRE EN ACCORDANCE AVEC LES NORMES EN VIGUEUR.

SYMBOL DESIGNATIONS

HFU – HOIST MOTOR CIRCUIT FUSING
PFU – TRANSFORMER PRIMARY FUSING
HCPT – CONTROL CIRCUIT TRANSFORMER
HCFU – CONTROL CIRCUIT FUSING
U – HOIST UP CONTACTOR
D – HOIST DOWN CONTACTOR
LSU – HOIST UPPER GEAR TYPE LIMIT SWITCH
LSD – HOIST LOWER GEAR TYPE LIMIT SWITCH
BLS – HOIST BLOCK OPERATED LIMIT SWITCH
HTAS – HOIST MOTOR TEMPERATURE ACTUATED SWITCH
TB– TERMINAL BOARD
G – FRAME GROUND

FIRST USED ON:
–

FROM: 448203

ELEMENTARY DIAGRAM

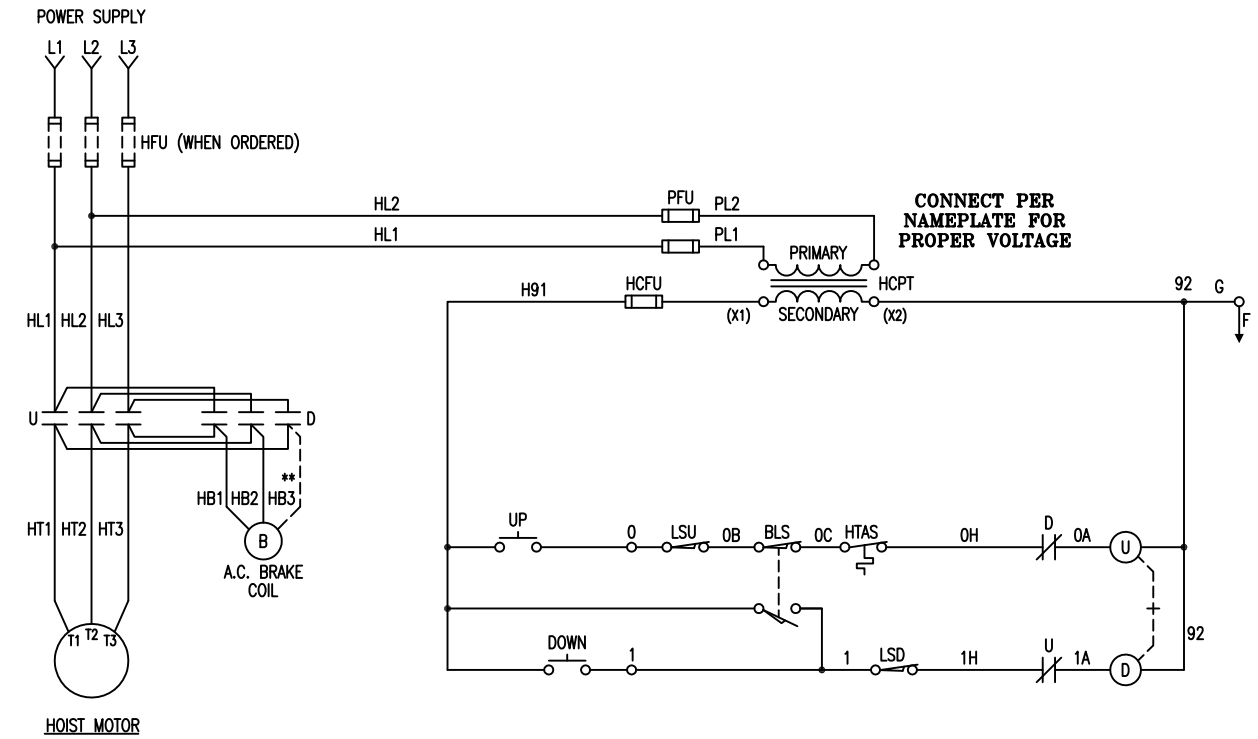

CABLE KING HOIST 1–SPEED

NO.	CHANGE	DATE	ITL.
1	UPDATED DRAWING	12/20/01	SJDA
2	ADDED BRAKE LEADS TO TB	07/10/02	PRT

WIRING DIAGRAM A.C.
1–SPEED HOIST
WITH TAS, BLS, GLS AND FUSES

SC. ------
DA. 11/08/01
DR. SJDA
CK.
AP.

YALE • LIFT-TECH
division of Columbus McKinnon Corporation
Muskegon, Michigan 49443

SHEET 55 OF 99 SHEETS

451222

Cable #		Dispositivo Conectado
L1		HFU
L2		HFU
L3		HFU
HL1		HFU, U–D, PFU
HL2		HFU, U–D, PFU
HL3		HFU, U–D
PL1		PFU, HCPT
PL2		PFU, HCPT
HT1		U–D
HT2		U–D
HT3		U–D
0	TB1	
0A		D, U
0B	TB1	
0C	TB1	
0H	TB1	D
1	TB1	
1A		U, D
1H	TB1	U
H91	TB1	HCFU
92	TB1	HCPT, G, U, D
HB1	TB2	U–D
HB2	TB2	U–D
HB3 **	TB2	U–D

Go To Index

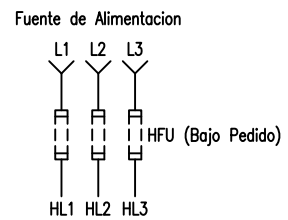

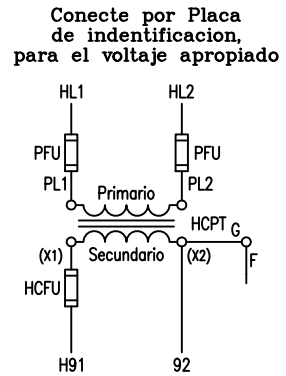

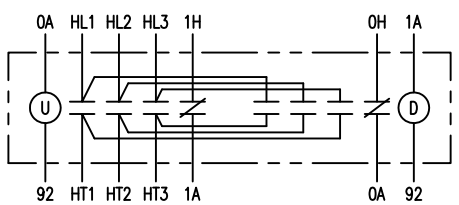

TB1

0	0B	0C	0H		1	1H	H91	92

TB2

HB1	HB2	HB3**						

** HB3 Necesario unicamente cuando un freno de 3 fases es conectado

Advertencia

A menos que el gancho de carga se eleve cuando el boton "UP" es presionado, danos severos al polipasto, y la caida de la carga pudieran resultar.

Corrija la inapropiada direccion del gancho, intercambiando la direccion de entrada de energia del motor que conduce L1 y L2. No cambie el cableado de la botonera

Advertencia

Este equipo debe ponerse a tierra de manera eficaz de acuerdo con los codigos aplicables

AVERTISSEMENT:

CET EQUIPMENT DOIT ETRE MIS A'LA TERRE EN ACCORDANCE AVEC LES NORMES EN VIGUEUR.

Designaciones de Simbolos

HFU – Fusible del Circuito del motor de polipasto
PFU – Fusible Primario del Transformador
HCPT – Transformador del Circuito de Control
HCFU – Fusible del Circuito de Control
U – Contactor de subir del polipasto
D – Contactor de bajar del polipasto
LSU – Interruptor Limitador de carrera tipo engranado superior del polipasto
LSD – Interruptor Limitador de carrera tipo engranado inferior del polipasto
BLS – Interruptor de Limite de carrera, tipo Bloque
HTAS – Interruptor activado por temperatura del motor del polipasto
TB– Tablero de Terminales
G – Marco de tierra
F

FIRST USED ON:
–

FROM: 448203

DIAGRAMA ELEMENTAL

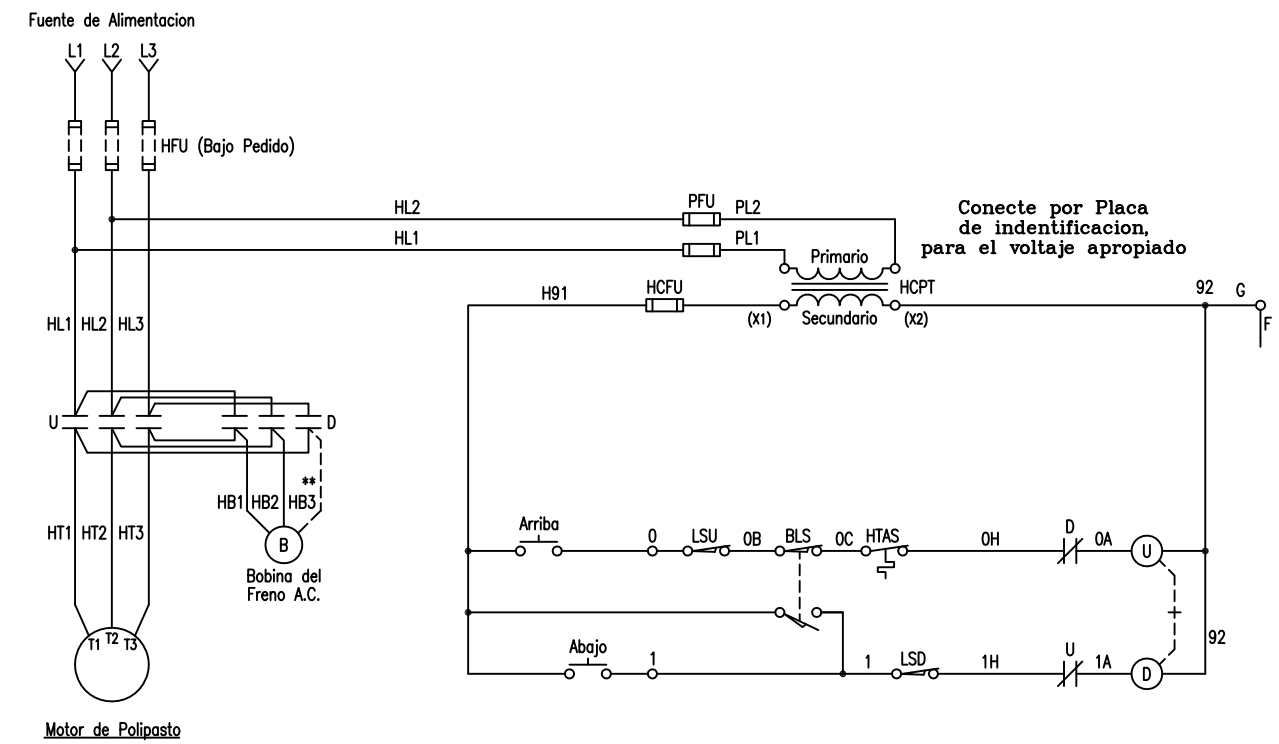

POLIPASTO DE 1 VELOCIDAD CABLE KING

NO.	CHANGE	DATE	ITL.
1	UPDATED DRAWING	12/20/01	SJDA
2	ADDED BRAKE LEADS TO TB	07/10/02	PRT
3	Spanish Translation	1/29/08	MRF

Diagrama Electrico — A.C.
Polipasto de 1 Velocidad
with TAS, BLS, GLS y Fusibles

SC. ------
DA. 11/08/01
DR. SJDA
CK.
AP.

YALE · LIFT-TECH
division of Columbus McKinnon Corporation
Muskegon, Michigan 49443

SHEET 55 OF 99 SHEETS

451222SP

WIRE #		DEVICE CONNECTED
L1		HFU
L2		HFU
L3		HFU
HL1		HFU, PFU, U–D
HL2		HFU, PFU, U–D
HL3		HFU, U–D
PL1		PFU, HCPT
PL2		PFU, HCPT
A		U–D, F
C		U–D, F
HT1		F
HT2		U–D
HT3		F
HT11		F
HT12		U–D
HT13		F
0	TB1	
0A		D, U
0B	TB1	
0C	TB1	
0H	TB1	D
1	TB1	
1A		U, D
1H	TB1	U
2	TB1	F
H91	TB1	HCFU
92	TB1	HCPT, U, D, F
HB1	TB2	U, D
HB2	TB2	U, D
HB3 **	TB2	U–D

Go To Index

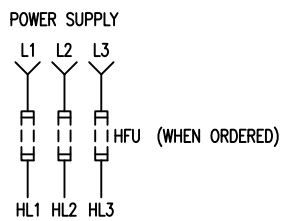

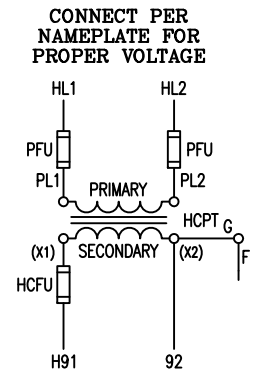

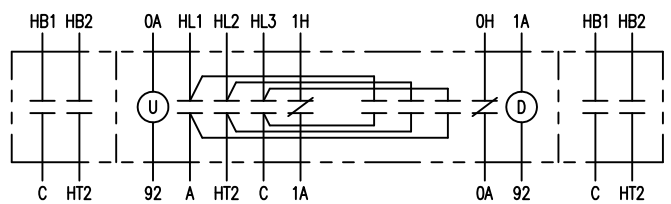

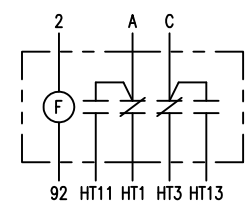

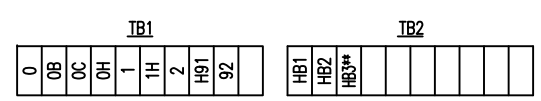

ELEMENTARY DIAGRAM

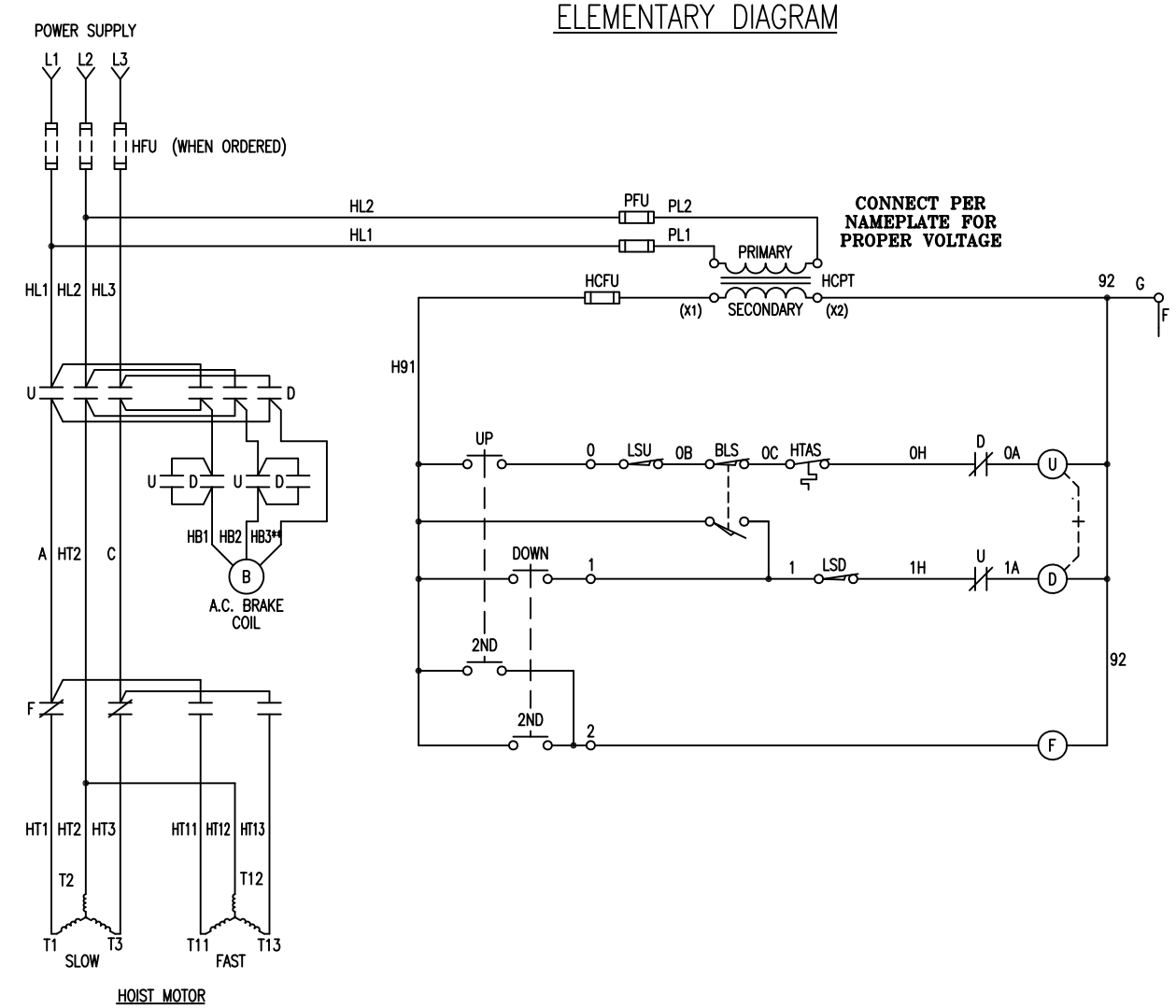

** HB3 NEEDED ONLY WHEN A 3–PHASE BRAKE IS CONNECTED.

WARNING:

UNLESS HOOK RAISES WHEN "UP" PUSHBUTTON IS PRESSED, SEVERE HOIST DAMAGE AND A DROPPED LOAD MAY RESULT.

CORRECT IMPROPER HOOK DIRECTION BY INTER–CHANGING MOTOR INPUT POWER LEADS L1 AND L2. DO NOT CHANGE PUSHBUTTON WIRING.

WARNING:

THIS EQUIPMENT MUST BE EFFECTIVELY GROUNDED ACCORDING TO APPLICABLE CODES.

AVERTISSEMENT:

CET EQUIPMENT DOIT ETRE MIS A'LA TERRE EN ACCORDANCE AVEC LES NORMES EN VIGUEUR.

SYMBOL DESIGNATIONS

HFU – HOIST MOTOR CIRCUIT FUSING
PFU – TRANSFORMER PRIMARY FUSING
HCPT – CONTROL CIRCUIT TRANSFORMER
HCFU – CONTROL CIRCUIT FUSING
U – HOIST UP CONTACTOR
D – HOIST DOWN CONTACTOR
F – HOIST FAST SPEED CONTACTOR
LSU – HOIST UPPER GEAR TYPE LIMIT SWITCH
LSD – HOIST LOWER GEAR TYPE LIMIT SWITCH
BLS – HOIST BLOCK OPERATED LIMIT SWITCH
HTAS – HOIST MOTOR TEMPERATURE ACTUATED SWITCH
TB – TERMINAL BOARD
G – FRAME GROUND
F

CABLE KING HOIST 2–SPEED

NO.	CHANGE	DATE	ITL.	WIRING DIAGRAM A.C.
1	ADDED BRAKE LEADS TO TB	07/10/02	SJDA	2–SPEED HOIST
				WITH TAS, BLS, GLS, FUSING, AUXILIARY FOR BRAKE
				SC. ------
				DA. 02/21/02
				DR. SJDA
				CK.
				AP.

YALE · LIFT-TECH
Division of Columbus McKinnon Corporation
Muskegon, Michigan 49443

SHEET 56 OF 99 SHEETS

451222

FIRST USED ON: 2345513

FROM: 446346

Cable #		Dispositivo Conectado
L1		HFU
L2		HFU
L3		HFU
HL1		HFU, PFU, U–D
HL2		HFU, PFU, U–D
HL3		HFU, U–D
PL1		PFU, HCPT
PL2		PFU, HCPT
A		U–D, F
C		U–D, F
HT1		F
HT2		U–D
HT3		F
HT11		F
HT12		U–D
HT13		F
0	TB1	
0A		D, U
0B	TB1	
0C	TB1	
0H	TB1	D
1	TB1	
1A		U, D
1H	TB1	U
2	TB1	F
H91	TB1	HCFU
92	TB1	HCPT, U, D, F
HB1	TB2	U, D
HB2	TB2	U, D
HB3 **	TB2	U–D

Go To Index

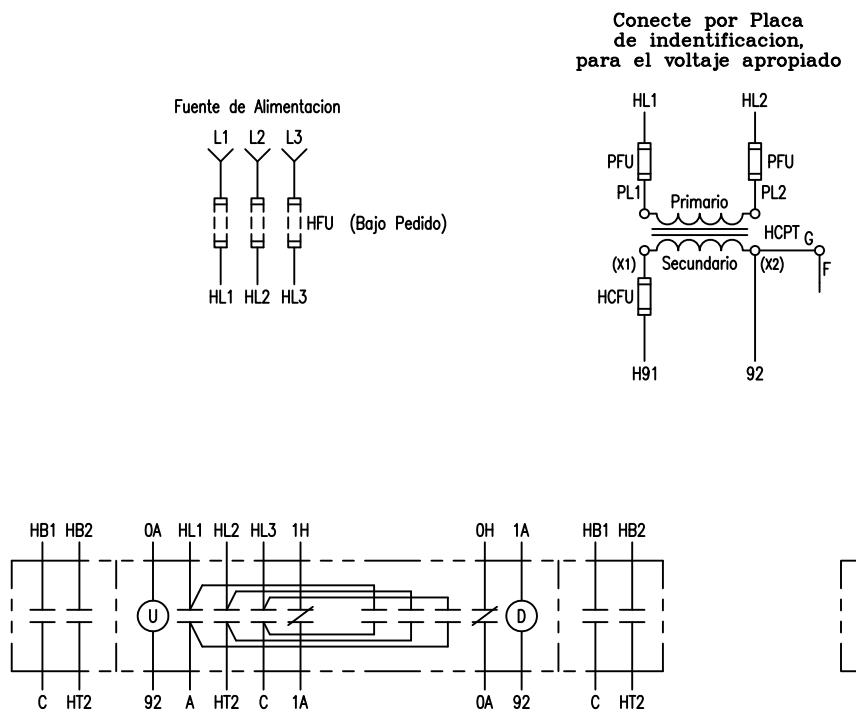

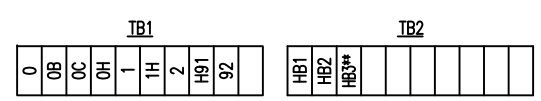

** HB3 Necesario unicamente cuando un freno de 3 fases es conectado

Advertencia

A menos que el gancho de carga se eleve cuando el boton "UP" es presionado, danos severos al polipasto, y la caida de la carga pudieran resultar.

Corrija la inapropiada direccion del gancho, intercambiando la direccion de entrada de energia del motor que conduce L1 y L2. No cambie el cableado de la botonera

Advertencia

Este equipo debe ponerse a tierra de manera eficaz de acuerdo con los codigos aplicables

AVERTISSEMENT:

CET EQUIPMENT DOIT ETRE MIS A'LA TERRE EN ACCORDANCE AVEC LES NORMES EN VIGUEUR.

Designaciones de Simbolos

HFU – Fusible del Circuito del motor de polipasto
PFU – Fusible Primario del Transformador
HCPT – Transformador del Circuito de Control
HCFU – Fusible del Circuito de Control
U – Contactor de subir del polipasto
D – Contactor de bajar del polipasto
F – Contactor de rapida velocidad del polipasto
LSU – Interruptor Limitador de carrera tipo engranado superior del polipasto
LSD – Interruptor Limitador de carrera tipo engranado inferior del polipasto
BLS – Interruptor de Limite de carrera, tipo Bloque
HTAS – Interruptor activado por temperatura del motor del polipasto
TB– Tablero de Terminales
G – Marco de tierra
F

FIRST USED ON: 2345513

FROM: 446346

DIAGRAMA ELEMENTAL

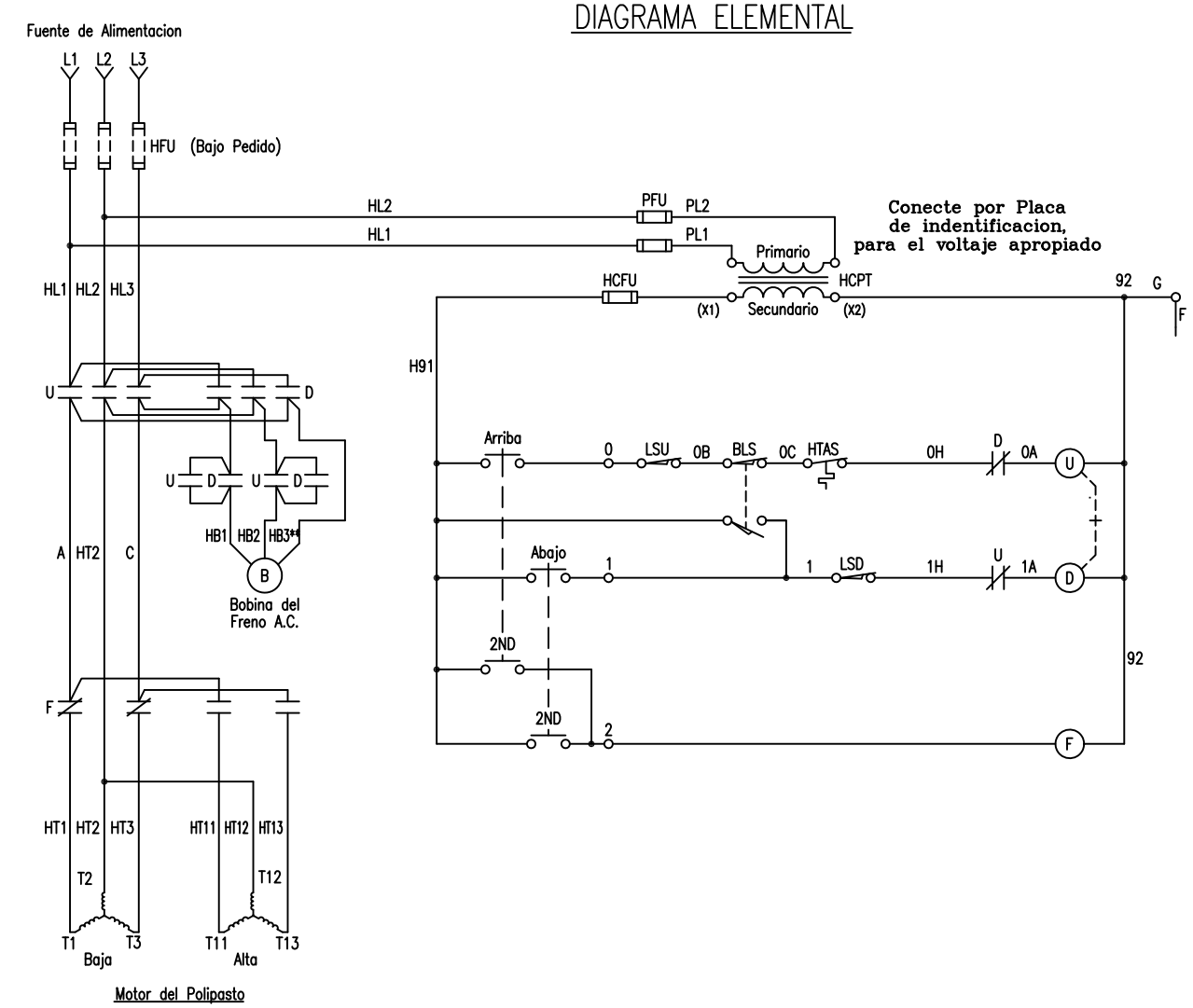

POLIPASTO DE 2 VELOCIDADES
CABLE KING

NO.	CHANGE	DATE	ITL.
1	ADDED BRAKE LEADS TO TB	07/10/02	SJDA
2	Spanish Translation	1/30/08	MRF

Diagrama Electrico — A.C.
Polipasto 2 Velccidad
with TAS, BLS, GLS, Fusible, Auxillary for Freno

SC. ------
DA. 02/21/02
DR. SJDA
CK.
AP.

YALE · LIFT-TECH
Division of Columbus McKinnon Corporation
Muskegon, Michigan 49443

SHEET 56 OF 99 SHEETS

451222SP

WIRE #	DEVICE CONNECTED	
L1		CFU
L2		CFU
L3		CFU
CL1		CFU, R–L
CL2		CFU, R–L
CL3		CFU, R–L
CT1		R–L
CT2		R–L
CT3		R–L
40	TB	
40A		L, R
40B	TB	L
41	TB	R
41A		R, L
H91	TB	
92	TB	L, R
CB1	TB	R–L
CB2	TB	R–L

Go To Index

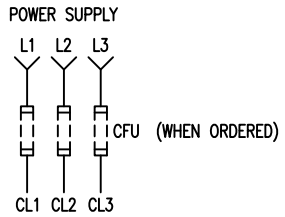

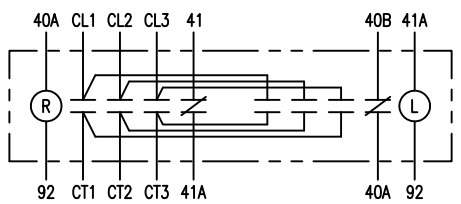

TB1

40	40B	41			H91	92		CB1	CB2

ELEMENTARY DIAGRAM

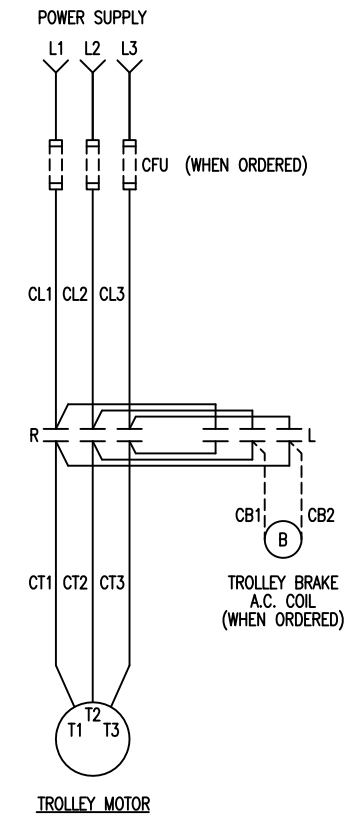

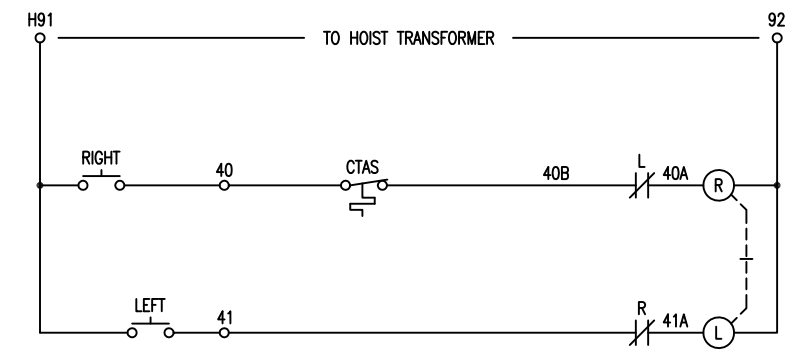

CABLE KING
1–SPEED TROLLEY

⚠WARNING:
THIS EQUIPMENT MUST BE EFFECTIVELY GROUNDED ACCORDING TO APPLICABLE CODES.

⚠AVERTISSEMENT:
CET EQUIPMENT DOIT ETRE MIS A'LA TERRE EN ACCORDANCE AVEC LES NORMES EN VIGUEUR.

SYMBOL DESIGNATIONS
- CFU – TROLLEY MOTOR CIRCUIT FUSING
- L – TROLLEY LEFT CONTACTOR
- R – TROLLEY RIGHT CONTACTOR
- TB – TERMINAL BOARD
- CTAS – TROLLEY MOTOR TEMPERATURE ACTIVATED SWITCH

NO.	CHANGE	DATE	ITL.
1	UPDATED DRAWING	12/20/01	SJDA

WIRING DIAGRAM A.C.
1–SPEED TROLLEY
WITH TAS, FUSING, AND OPTIONAL A.C. BRAKE

SC. ------
DA. 11/08/01
DR. SJDA
CK.

YALE · LIFT-TECH
Division of Columbus McKinnon Corporation
Muskegon, Michigan 49443

SHEET 57 OF 99 SHEETS

451222

FIRST USED ON: 2281052

FROM: 448204

Cable #		Dispositivo Conectado
L1		CFU
L2		CFU
L3		CFU
CL1		CFU, R–L
CL2		CFU, R–L
CL3		CFU, R–L
CT1		R–L
CT2		R–L
CT3		R–L
40	TB	
40A		L, R
40B	TB	L
41	TB	R
41A		R, L
H91	TB	
92	TB	L, R
CB1	TB	R–L
CB2	TB	R–L

Go To Index

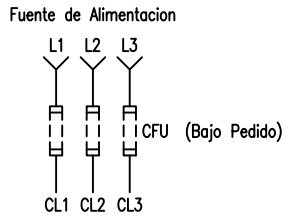

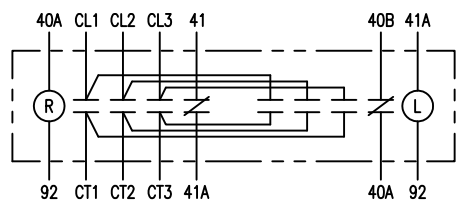

TB1

40	40B	41			H91	92		CB1	CB2

DIAGRAMA ELEMENTAL

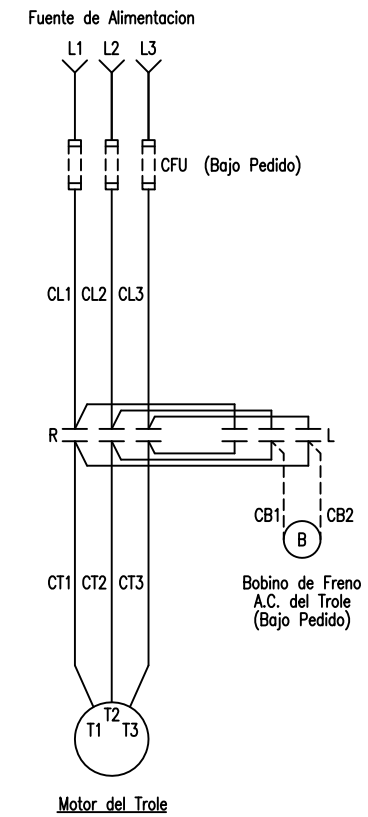

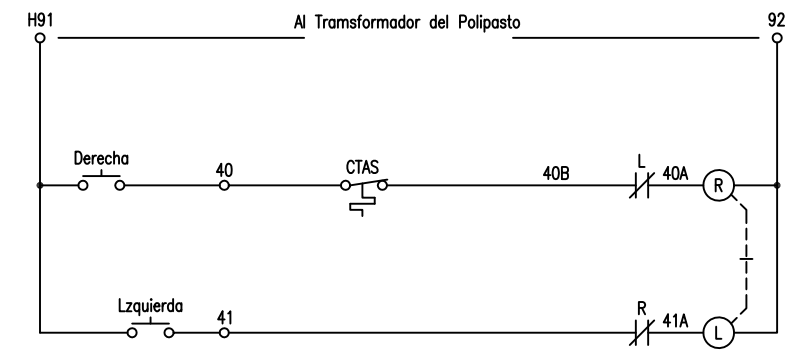

TROLE DE 1 VELOCIDAD
CABLE KING

Advertencia:

ESTE EQUIPO DEBE PONERSE A TIERRA DE MANERA EFICAZ DE ACUERDO CON LOS CODIGOS APLICABLES

AVERTISSEMENT:

CET EQUIPMENT DOIT ETRE MIS A'LA TERRE EN ACCORDANCE AVEC LES NORMES EN VIGUEUR.

Designaciones de Simbolos

CFU – Fusible del circuito del motor del trole
L – Contactor Lzquierdo del trole
R – Contactor derecho del trole
TB – Tablero de Terminales
CTAS – Interruptor activado por temperatura del motor del trole

NO.	CHANGE	DATE	ITL.
1	UPDATED DRAWING	12/20/01	SJDA
2	Spanish Translation	1/30/08	MRF

Diagrama Electrico A.C.
Trole de 1 Velocidad
with TAS, Fusible, y Opcionale Freno A.C.

SC. ------
DA. 11/08/01
DR. SJDA
CK.

YALE · LIFT-TECH
Division of Columbus McKinnon Corporation
Muskegon, Michigan 49443

SHEET 57 OF 99 SHEETS

451222SP

FIRST USED ON: 2281052

FROM: 448204

Go To Index

WIRE #		DEVICE CONNECTED
L1		CFU
L2		CFU
L3		CFU
CL1		CFU, R-L
CL2		CFU, R-L
CL3		CFU, R-L
D		R-L, FC
F		R-L, FC
CT1		FC
CT2		R-L
CT3		FC
CT11		FC
CT12		R-L
CT13		FC
40	TB	
40A		L, R
40B	TB	
40C	TB	L
41	TB	R
41A		R, L
42	TB	FC
H91	TB	
92	TB	R, L, FC
CB1	TB	
CB2	TB	

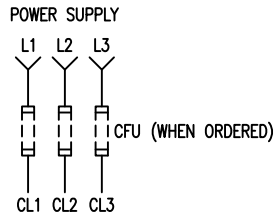

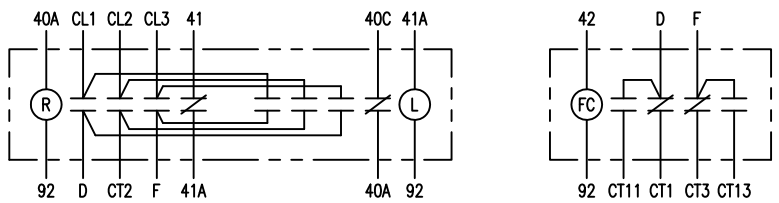

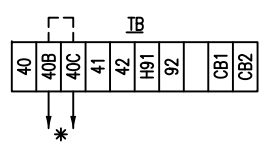

* NOTE:
TO SECOND MOTOR TAS SWITCH.
IF CTAS#2 IS NOT USED, JUMPER 40B TO 40C, AS SHOWN.

ELEMENTARY DIAGRAM

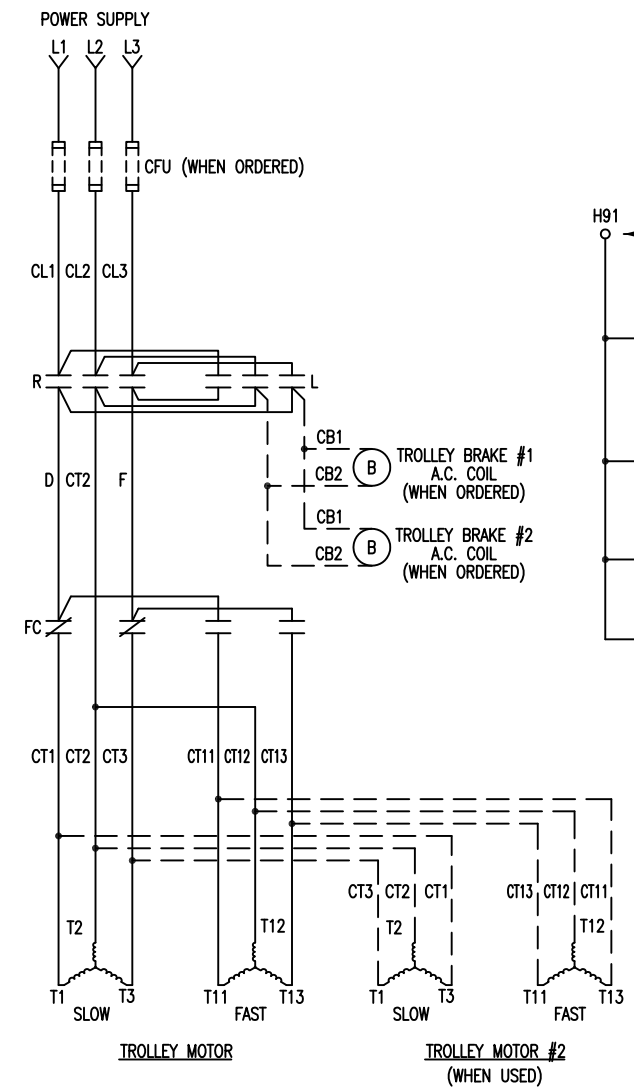

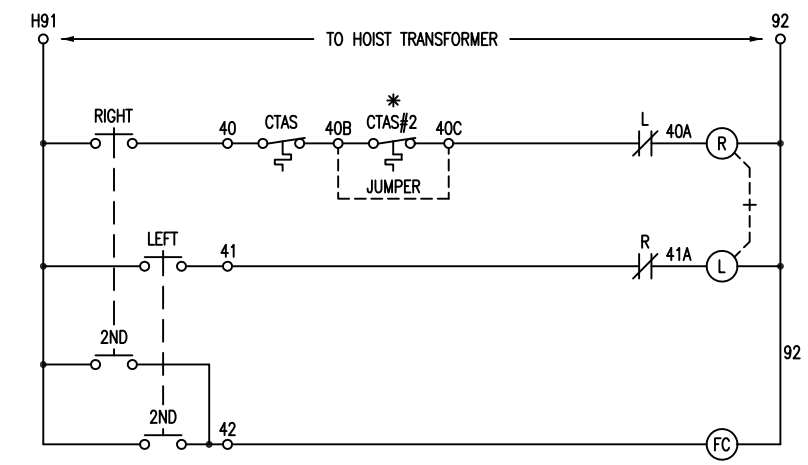

WARNING:
THIS EQUIPMENT MUST BE EFFECTIVELY GROUNDED ACCORDING TO APPLICABLE CODES.

AVERTISSEMENT:
CET EQUIPMENT DOIT ETRE MIS A'LA TERRE EN ACCORDANCE AVEC LES NORMES EN VIGUEUR.

SYMBOL DESIGNATIONS
CFU – TROLLEY MOTOR CIRCUIT FUSING
R – TROLLEY RIGHT CONTACTOR
L – TROLLEY LEFT CONTACTOR
FC – TROLLEY FAST CONTACTOR
CTAS – TROLLEY MOTOR TEMPERATURE ACTIVATED SWITCH
TB – TERMINAL BOARD
G – FRAME GROUND
F

CABLE KING
2-SPEED TROLLEY

NO.	CHANGE	DATE	ITL.	WIRING DIAGRAM	A.C.
1	ADDED 2nd BRAKE	7/96	GDB	2-SPEED TROLLEY	
				WITH TAS, AND OPTIONAL FUSES	
				SC. ------	YALE · LIFT-TECH Division of Columbus McKinnon Corporation Muskegon, Michigan 49443
				DA. 7/31/95	
				DR. TLB	SHEET 58 OF 99 SHEETS
				CK.	451222

FIRST USED ON:
...

FROM: 443900

Go To Index

Cable #	Dispositivo Conectado	
L1		CFU
L2		CFU
L3		CFU
CL1		CFU, R-L
CL2		CFU, R-L
CL3		CFU, R-L
D		R-L, FC
F		R-L, FC
CT1		FC
CT2		R-L
CT3		FC
CT11		FC
CT12		R-L
CT13		FC
40	TB	
40A		L, R
40B	TB	
40C	TB	L
41	TB	R
41A		R, L
42	TB	FC
H91	TB	
92	TB	R, L, FC
CB1	TB	
CB2	TB	

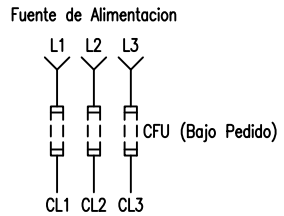

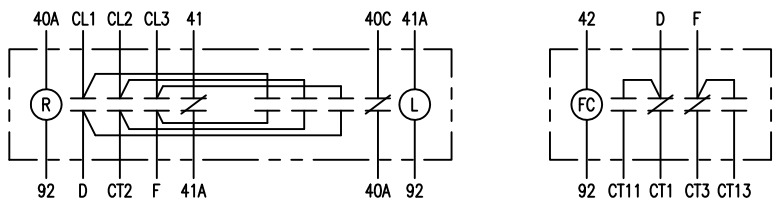

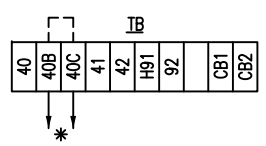

* NOTA:
Al interruptor TAS del segundo motor.
Si el CTAS #2 no esta siendo utilizado,
puentear el 40B al 40C como se muestra.

ADVERTENCIA
ESTE EQUIPO DEBE PONERSE A TIERRA DE MANERA EFICAZ DE ACUERDO CON LOS CODIGOS APLICABLES

AVERTISSEMENT:
CET EQUIPMENT DOIT ETRE MIS A'LA TERRE EN ACCORDANCE AVEC LES NORMES EN VIGUEUR.

Designaciones de Simbolos
CFU – Fusible del circuito del motor del trole
R – Contactor derecho del trole
L – Contactor Izquierdo del trole
FC – Contactor rapido del trole
CTAS – Interruptor activado por temperatura del motor del trole
TB – Tablero de Terminales
G – Marco de tierra

DIAGRAMA ELEMENTAL

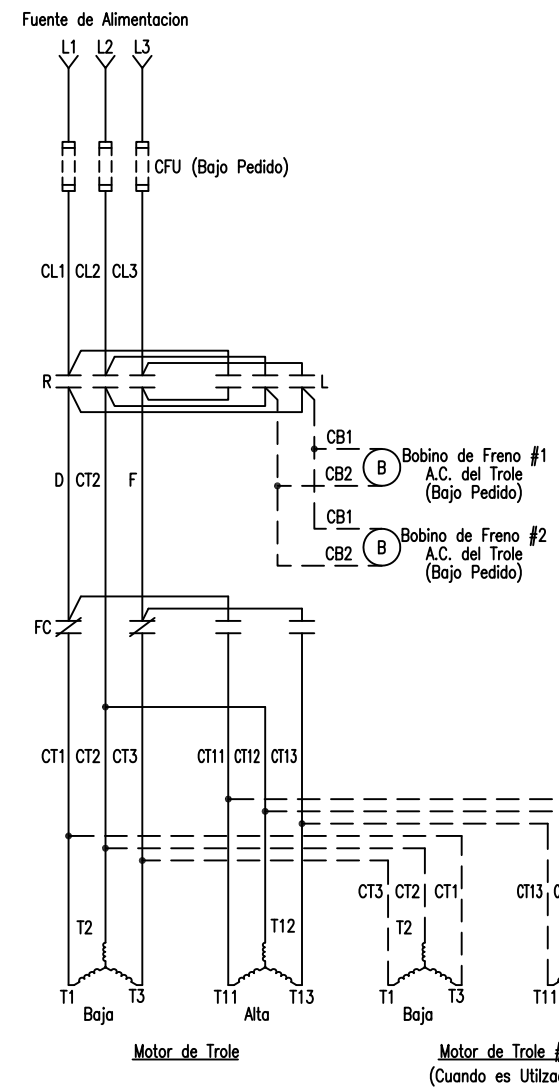

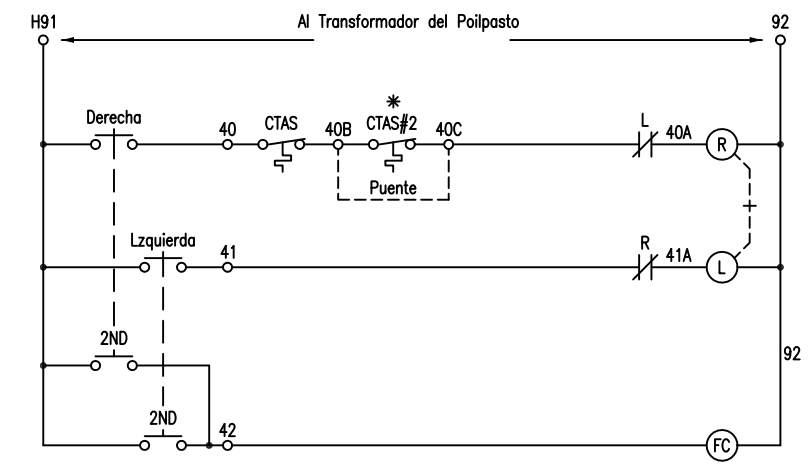

TROLE DE 2 VELOCIDADES CABLE KING

NO.	CHANGE	DATE	ITL.	Diagrama Electrico	A.C.
1	ADDED 2nd BRAKE	7/96	GDB	Trole de 2 Velocidades	
2	Spanish Translation	1/31/08	MRF	with TAS y Fusibles Opcionales	
				SC. ------	YALE · LIFT-TECH Division of Columbus McKinnon Corporation Muskegon, Michigan 49443
				DA. 7/31/95	
				DR. TLB	SHEET 58 OF 99 SHEETS
				CK.	451222

FIRST USED ON:
...

FROM: 443900