HI-SPEED INDUSTRIAL SERVICE
(800) 713-0101 ◦ www.gohispeed.com

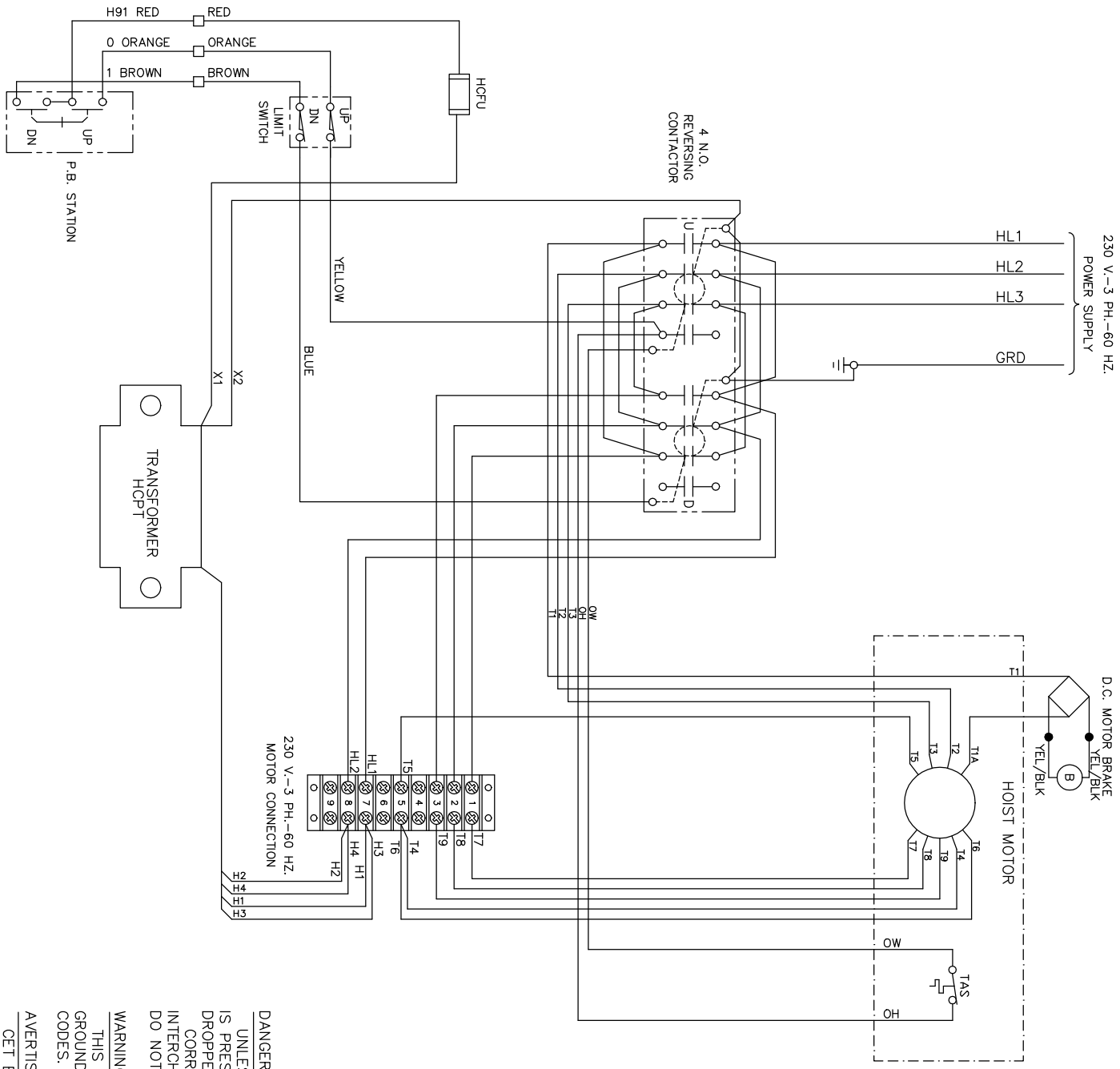

DANGER:
UNLESS HOOK RAISES WHEN "UP" BUTTON IS PRESSED SEVERE HOIST DAMAGE AND A DROPPED LOAD MAY RESULT.
CORRECT IMPROPER HOOK DIRECTION BY INTERCHANGING INPUT POWER L1 AND L3 DO NOT CHANGE PUSHBUTTON WIRING.

WARNING
THIS EQUIPMENT MUST BE EFFECTIVELY GROUNDED ACCORDING TO APPLICABLE CODES.

AVERTISSEMENT
CET EQUIPMENT DOIT ETRE MIS A'LA TERRE EN ACCORDANCE AVEC LES NORMES EN VIGUEUR.

NO.	CHANGE	DATE	ITL.

WIRING DIAGRAM 230 VOLT
3 PHASE RECONNECTABLE
D.C. SOLENOID BRAKE
BUDGIT ELECTRIC HOIST

SC. ------
DA. 4/17/90
DR. RITTER
CK.

YALE · LIFT-TECH
division of Columbus McKinnon Corporation
Muskegon, Michigan 49443

SHEET 1 OF MORE SHEETS

330565

FIRST USED ON:
SE-08057