115 VOLTS CONTROL CIRCUIT

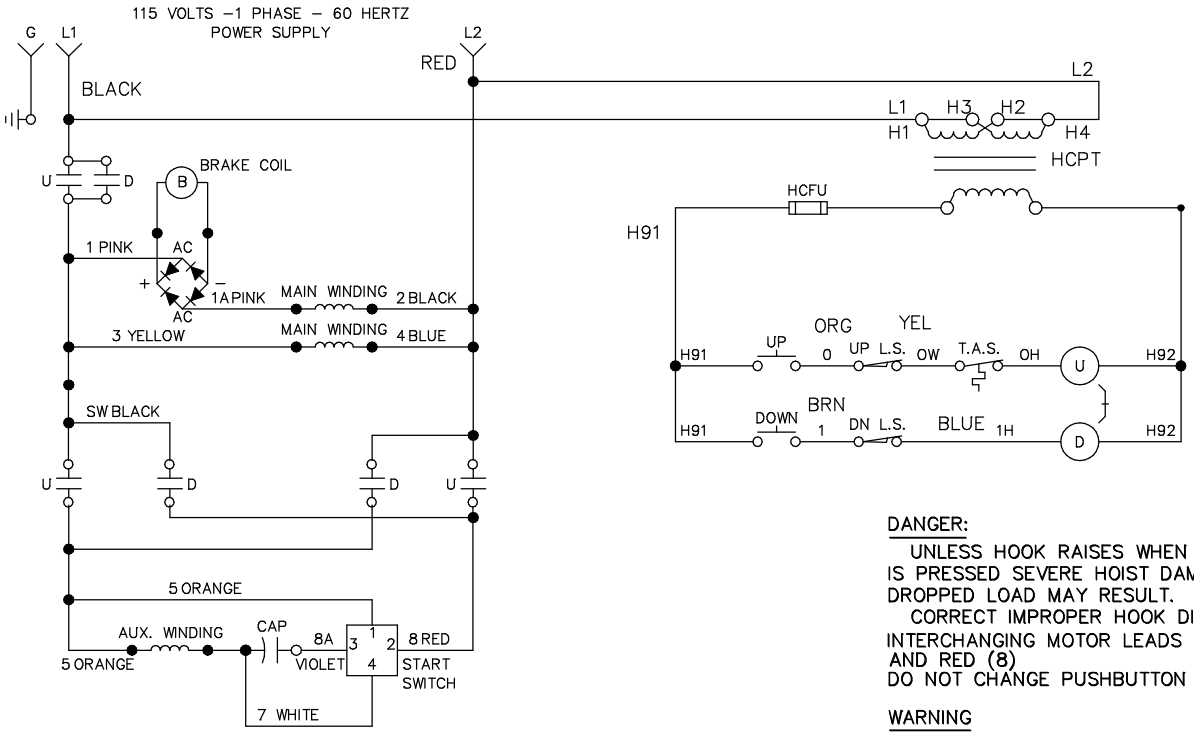

DANGER:

UNLESS HOOK RAISES WHEN "UP" BUTTON IS PRESSED SEVERE HOIST DAMAGE AND A DROPPED LOAD MAY RESULT.

CORRECT IMPROPER HOOK DIRECTION BY INTERCHANGING MOTOR LEADS ORANGE (5) AND RED (8)
DO NOT CHANGE PUSHBUTTON WIRING.

WARNING

THIS EQUIPMENT MUST BE EFFECTIVELY GROUNDED ACCORDING TO APPLICABLE CODES.

AVERTISSEMENT

CET EQUIPMENT DOIT ETRE MIS A'LA TERRE EN ACCORDANCE AVEC LES NORMES EN VIGUEUR.

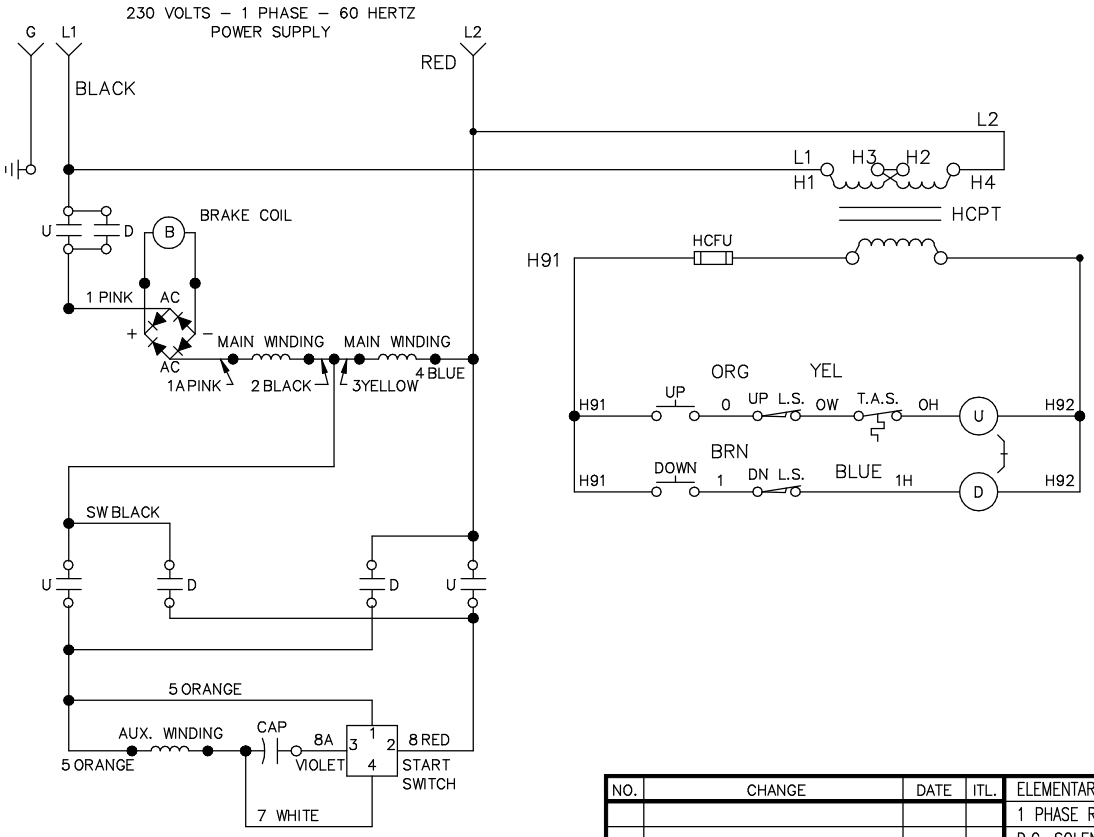

NO.	CHANGE	DATE	ITL.

ELEMENTARY DIAGRAM WITH TRANSFORMER
1 PHASE RECONNECTABLE, STEARNS REVERSING SWITCH
D.C. SOLENOID BRAKE
BUDGIT ELECTRIC HOIST

SC. ------
DA. 7/19/04
DR. RITTER
CK.

YALE · LIFT-TECH
division of Columbus McKinnon Corporation
Muskegon, Michigan 49443

SHEET 4 OF 4 SHEETS

333171

FROM 330174 SHEET 4