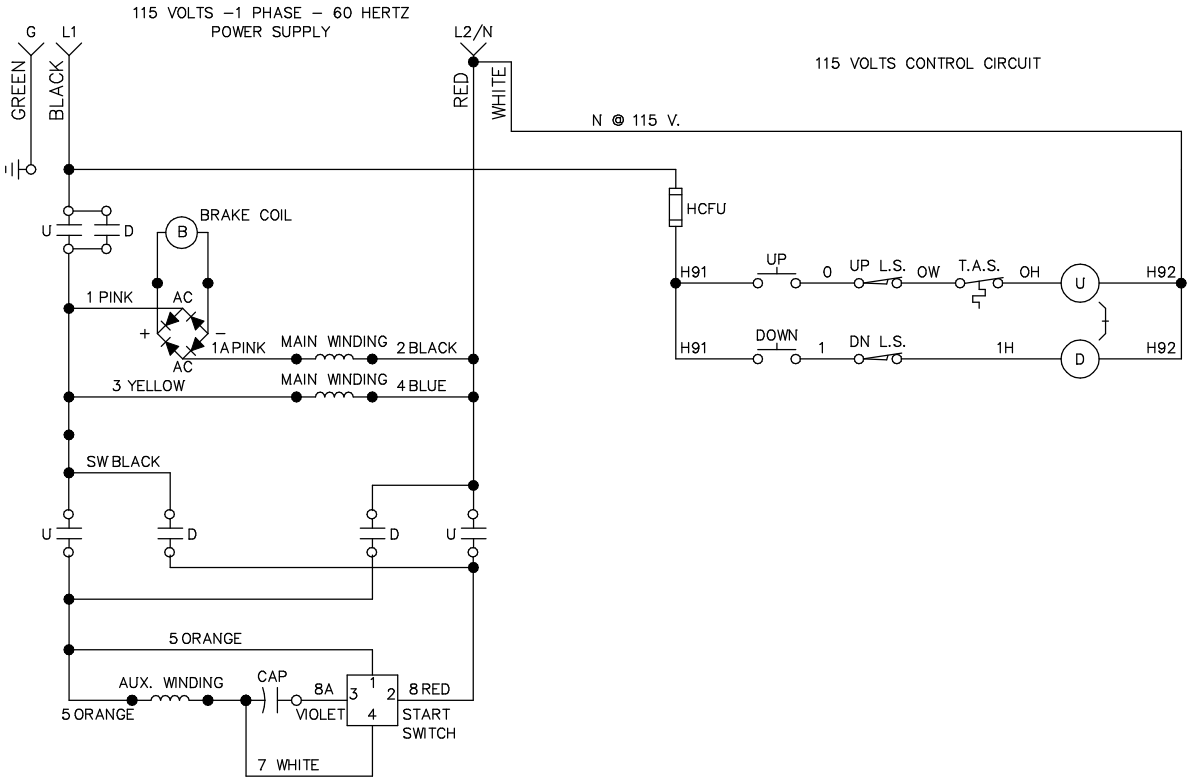

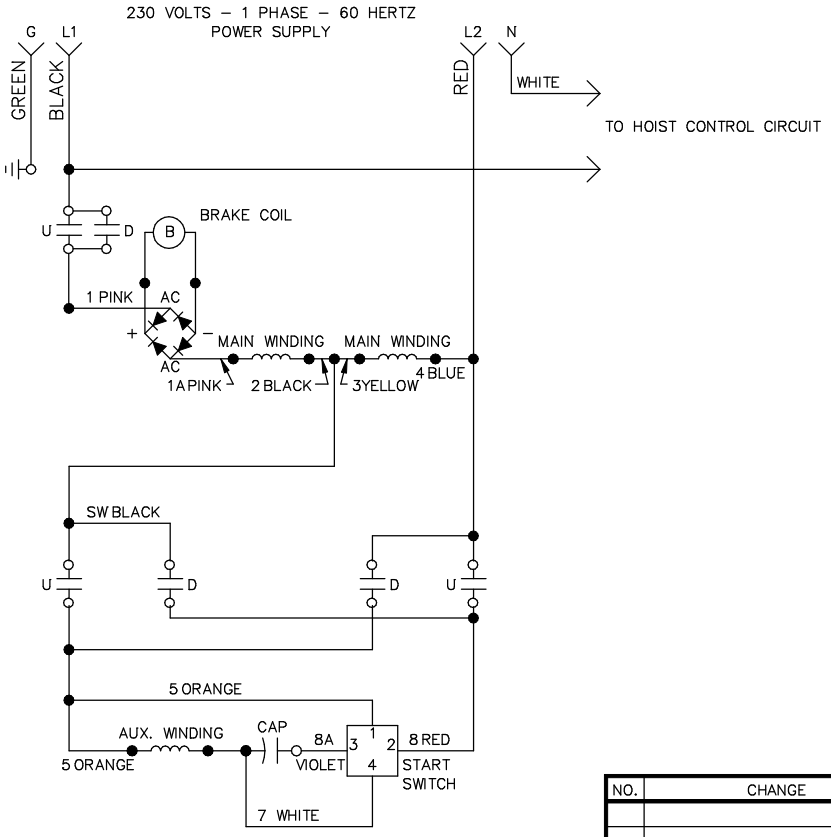

DANGER:

UNLESS HOOK RAISES WHEN "UP" BUTTON IS PRESSED SEVERE HOIST DAMAGE AND A DROPPED LOAD MAY RESULT.

CORRECT IMPROPER HOOK DIRECTION BY INTERHHANGING MOTOR LEADS ORANGE (5) AND RED (8)

DO NOT CHANGE PUSHBUTTON WIRING.

WARNING

THIS EQUIPMENT MUST BE EFFECTIVELY GROUNDED ACCORDING TO APPLICABLE CODES.

AVERTISSEMENT

CET EQUIPMENT DOIT ETRE MIS A'LA TERRE EN ACCORDANCE AVEC LES NORMES EN VIGUEUR.

NO.	CHANGE	DATE	ITL.

ELEMENTARY DIAGRAM
1 PHASE RECONNECTABLE, STEARNS REVERSING SWITCH
D.C. SOLENOID BRAKE
BUDGIT ELECTRIC HOIST

SC. ------
DA. 6/29/89
DR. VERBOS
CK.

YALE · LIFT-TECH
division of Columbus McKinnon Corporation
Muskegon, Michigan 49443

SHEET 2 OF MORE SHEETS

330174

FIRST USED ON:
SE–08052

TAKEN FROM 330040